SURFSIDE SEAWALL DESIGN

TOWN OF SURFSIDE, FLORIDA

PROJECT No: 12-5247

125247-01-T1-CVR.dwg

INDEX OF PLANS

SHEET NO.	SHEET DESCRIPTION
G1	TITLE SHEET
G2	GENERAL NOTES
C1	KEY PLAN
C2	SITE PLAN - FROUDE AVE.
C3	SITE PLAN - BISCAYA DR. / BAY DR.
C4	SITE PLAN - 90TH ST.
C5	SITE PLAN - 92ND ST.
C6	SITE PLAN - 93RD ST.
C7	SITE PLAN - 94TH ST. (ELI LURIE BLVD.)
C8	SITE PLAN - 95TH ST.
C9	SITE PLAN - SURFSIDE PARK
C10	PLAN AND ELEVATION DETAILS
C11	CROSS SECTIONS AND DETAILS
C12	SWPPP DETAILS

LOCATION MAP

SECTION 35 TWP. 52 S RNG. 42 E N.T.S.

N W E S

TOWN OFFICIALS

MAYOR:	DANIEL DIETCH
COMMISSIONERS:	MICHAEL KARUKIN
	JOE GRAUBART
	MICHELLE KLIGMAN
	MARTA OLCHYK
TOWN MANAGER:	MICHAEL CROTTY

NOTES:

1. *RESPONSIBILITY FOR THE USE OF THESE PLANS FOR ANY PURPOSE PRIOR TO SECURING PERMITS FROM ALL AGENCIES HAVING JURISDICTION OVER THIS PROJECT WILL FALL SOLELY UPON THE USER.*
2. *AN ELECTRONIC CAD FILE WILL BE PROVIDED FOR SURVEY LAYOUT. SURVEYOR IS RESPONSIBLE FOR VERIFICATION OF ALL LOCATIONS IN ELECTRONIC FILE. CONSTRUCTION LAYOUT IS THE SOLE RESPONSIBILITY OF THE SURVEYOR, AND THE ELECTRONIC CAD FILE IS PROVIDED ONLY AS A GENERIC GUIDE*
3. *THE ELEVATIONS SHOWN ON THE DESIGN/CONSTRUCTION DRAWINGS ARE BASED ON THE NATIONAL GEODETIC VERTICAL DATUM (NGVD) 1929, UNLESS OTHERWISE NOTED.*

BENCHMARK:

SEE SHEET G2 FOR BENCHMARK INFORMATION.

SHOP DRAWINGS TO BE SUBMITTED TO:

CALVIN, GIORDANO & ASSOCIATES, INC.
1800 ELLER DRIVE
SUITE 600
FORT LAUDERDALE, FL 33409
PHONE: 954-921-7781 FAX: 954-921-8807

PERMITTING AGENCIES	DATE SUBMITTED	CGA INITIALS	DATE APPROVED	PERMIT NUMBER
DRER (DEPARTMENT OF REGULATORY AND ECONOMIC RESOURCES), MIAMI – DADE COUNTY	09-05-13	DF	10-28-13	CLI-2012-0240
USACE (UNITED STATES ARMY CORPS OF ENGINEERS)	08-30-13	DF	09-12-13	SAJ-2002-01859(NW-RR)
FDEP (FLORIDA DEPARTMENT OF ENVIRONMENTAL PROTECTION)	04-01-13	DF	06-28-13	13-0317860-001

NO	DATE	REVISION	BY	NO	DATE	REVISION	BY

PLANS PREPARED BY:

Calvin, Giordano & Associates, Inc.
EXCEPTIONAL SOLUTIONS™
1800 Eller Drive, Suite 600, Fort Lauderdale, Florida 33316
Phone: 954.921.7781 • Fax: 954.921.8807
CERTIFICATE OF AUTHORIZATION 514

KNOW WHAT'S BELOW ALWAYS CALL 811 BEFORE YOU DIG
It's fast. It's free. It's the law.
www.callsunshine.com

FOR BIDDING PURPOSES ONLY

CURRENT REV No.: ---- - ----

DAVID W. FRODSHAM, P.E.
STATE OF FLORIDA PROFESSIONAL ENGINEER
LICENSE No. 75507

DATE: 4/30/2014

1

G1

14

File Name: P:\Projects\2012\125247 Surfside Seawall Design\CADD Files\Drawings\125247-01-T1-CVR.dwg – (Plotted by: Curt Alexander on Thursday, May 01, 2014 10:43:56 AM)

NOTES

1. THE BENCHMARK DATUM FOR THIS PROJECT IS NGVD 1929. THE BENCHMARK OF ORIGIN IS A DISK SET IN A LIGHT STRUCTURE WITH STAMPING T 243 1965. AT SURFSIDE, ABOUT 100 YARDS WEST OF THE INTERSECTION OF SURFSIDE BOULEVARD AND BAY DRIVE, SET ON THE TOP OF THE EAST END OF THE NORTH CONCRETE GUARDRAIL OF A BRIDGE OVER INDIAN CREEK WHICH LEADS WESTERLY TO INDIAN CREEK VILLAGE AND INDIAN CREEK GOLF COURSE, 21 FEET WEST OF THE WEST WALL OF THE GUARD HOUSE WHICH IS LOCATED AT THE EAST END OF THE BRIDGE, 0.6 FOOT EAST OF THE FIRST LARGE CONCRETE POST IN THE BRIDGE GUARDRAIL WEST OF THE GUARD HOUSE AND ½ FOOT ABOVE THE LEVEL ROADWAY. THE ELEVATION IS 12.965 FEET (NGVD 29).

2. CONTRACTOR SHALL RESTORE ANY ADJACENT AREAS DAMAGED DURING CONSTRUCTION TO THEIR ORIGINAL CONDITION OR BETTER AT NO ADDITIONAL COST TO THE CONTRACT.

3. THE LOCATIONS OF THE EXISTING UTILITIES SHOWN IN THE PLANS ARE BASED ON LIMITED INVESTIGATION TECHNIQUES AND SHOULD BE CONSIDERED APPROXIMATE ONLY. THE VERIFIED LOCATIONS / ELEVATIONS APPLY ONLY AT THE POINT SHOWN. INTERPOLATIONS BETWEEN THESE POINTS HAVE NOT BEEN VERIFIED. UTILITIES SHALL REMAIN UNLESS OTHERWISE NOTED. NOT ALL UTILITIES WITHIN THE VICINITY OF THE PROJECT ARE DEPICTED. AERIAL UTILITIES EXIST IN VICINITY OF PROJECT SITE.

4. THE CONTRACTOR SHALL NOTIFY THE APPROPRIATE UTILITY COMPANY A MINIMUM OF 2 BUSINESS DAYS IN ADVANCE OF ANY EXCAVATION INVOLVING ITS UTILITIES IN ORDER THAT A COMPANY REPRESENTATIVE CAN BE PRESENT.

   UTILITY OWNERS/CONTACT PERSON:

KARIM ROSSY	CITY OF NORTH MIAMI BEACH PUBLIC UTILITES	305-948-2967	Ext: 7962
LEONARD MAXWELL-NEWBOLD	COMCAST CABLE	954-447-8405	
AURELIO DEL VALLE	PUBLIC WORKS - MDC	305-592-8925	Ext: 258
TRACY STERN	FLORIDA POWER & LIGHT	800-868-9554	
SEYED HAJASSADOLLAH	FLORIDA POWER & LIGHT (TRANSMISSION)	305-228-5290	
DAVID MCBRIDE	ATLANTIC COMMUNICATIONS	305-861-8069	Ext: 3204
YVONNE GOLDMAN	TECO PEOPLES GAS - SOUTH FLORIDA	954-453-0824	
STEVE MASSIE	ATT/DISTRIBUTION	305-222-8745	

   THE CONTRACTOR SHALL VERIFY IF OTHER UTILITIES NOT SHOWN IN PLANS EXIST WITHIN THE AREA OF CONSTRUCTION. SHOULD UTILITY CONFLICTS ARISE, THE CONTRACTOR SHALL INFORM THE ENGINEER, THE OWNER, AND THE UTILITY COMPANY OF THE CONFLICT.

5. ANY NAVD-88 OR NGVD-29 MONUMENT WITHIN THE LIMITS OF CONSTRUCTION IS TO BE PROTECTED. IF IN DANGER OF DAMAGE THE PROJECT ENGINEER SHALL NOTIFY:

   NATIONAL GEODETIC INFORMATION SERVICES CENTER
   NOAA NATIONAL GEODETIC SURVEY, N/CG 17
   SSMC 3, STATION 09202
   SILVERSPRING, MARYLAND 20910
   TELEPHONE NO. (301) 713-3242

6. ANY PUBLIC LAND CORNER WITHIN THE LIMITS OF CONSTRUCTION IS TO BE PROTECTED.

7. THE CONTRACTOR SHALL NOTIFY THE TOWN OF SURFSIDE ENGINEERING REPRESENTATIVE, BOB MCSWEENEY, OF CALVIN, GIORDANO & ASSOCIATES, INC. AT 954-921-7781 30 DAYS IN ADVANCE OF COMMENCING CONSTRUCTION.

8. CONTRACTOR SHALL PROVIDE THE NAME AND PHONE NUMBER OF A RESPONSIBLE PERSON WHO WILL BE SUBJECT TO EMERGENCY CALLS 24 HOURS PER DAY, 7 DAYS PER WEEK.

9. THE CONTRACTOR SHALL NOT BRING ANY HAZARDOUS MATERIALS ON TO THE PROJECT. SHOULD CONTRACTOR REQUIRE SUCH FOR PERFORMING THE CONTRACTED WORK, THE CONTRACTOR SHALL REQUEST, IN WRITING, WRITTEN PERMISSION FROM THE PROJECT ENGINEER. THE CONTRACTOR SHALL PROVIDE A COPY OF THE REQUEST TO THE TOWN OF SURFSIDE ENGINEERNG REPRESENTATIVE, BOB MCSWEENEY OF CALVIN, GIORDANO & ASSOCIATES INC. THE CONTRACTOR SHALL PROVIDE THE ENGINEER WITH A COPY OF THE MATERIAL SAFETY DATA SHEET (MSDS) FOR EACH HAZARDOUS MATERIAL PROPOSED FOR USE, AND PROVIDE A DESCRIPTION OF THE SPECIFIC MANNER IN WHICH THE MATERIAL WILL BE USED. THE PROJECT ENGINEER SHALL COORDINATE WITH THE TOWN ENGINEER PRIOR TO ISSUING WRITTEN APPROVAL TO THE CONTRACTOR. BECAUSE STATE LAW DOES NOT TREAT PETROLEUM PRODUCTS THAT ARE PROPERLY CONTAINERIZED AS HAZARDOUS MATERIALS, SUCH PRODUCTS DO NOT REQUIRE AN MSDS SUBMITTAL. ALL BULK PETROLEUM PRODUCTS STORED ON SITE SHALL REQUIRE PROPER STORAGE WHICH INCLUDES SECONDARY CONTAINMENT.

10. CONTRACTOR SHALL BE NPDES COMPLIANT PRIOR TO CONSTRUCTION ACTIVITIES.

11. EROSION CONTROL ITEMS WILL BE UTILIZED FOR PREVENTION, CONTROL, ABATEMENT OF EROSION, SEDIMENTATION, AND WATER POLLUTION. THESE ITEMS ARE TO BE USED AT THE LOCATIONS DESCRIBED IN THE CONTRACTOR'S APPROVED EROSION CONTROL PLAN OR AS DIRECTED BY THE PROJECT ENGINEER TO COMPLY WITH ALL FEDERAL, STATE AND LOCAL REGULATIONS. ALL HAY BALES, ROCK BAGS, TURBIDITY BARRIER, AND SILT FENCE SHALL BE REMOVED AT THE COMPLETION OF THE PROJECT.

12. LANDSCAPING EXISTS AT STREET ENDS BUT HAS NOT BEEN DEPICTED ON THESE PLANS FOR CLARITY. CONTRACTOR IS RESPONSIBLE FOR VISITING SITE PRIOR TO BID TO VERIFY PATH OF ACCESS FOR EQUIPMENT TO SEAWALLS. AFTER CONSTRUCTION, CONTRACTOR IS TO RESTORE ANY DISTURBED LANDSCAPING TO EXISTING CONDITIONS OR BETTER. ALL DISTURBED GRASSED AREAS WITHIN THE PROJECT BOUNDARIES SHALL BE SODDED WITH ST. AUGUSTINE FLORATAM SOD.

13. WORK MUST BE PERFORMED FROM UPLANDS AT FROUDE ST. AT ALL ALL OTHER LOCATIONS WORK MAY BE PERFORMED FROM LAND OR WATER.

14. THE CONTRACTOR SHALL COORDINATE SELECTION AND REVIEW OF ANY PROPOSED STAGING AREAS WITH THE TOWN OF SURFSIDE ENGINEERNG REPRESENTATIVE, BOB MCSWEENEY, OF CALVIN, GIORDANO & ASSOCIATES, INC. AT 954-921-7781. STAGING AREAS AND STOCKPILES FOR MATERIAL AND EQUIPMENT SHALL NOT BE PLACED IN PROXIMITY TO SURFACE WATERS.

15. IF SUSPECT CONTAMINATED OR HAZARDOUS MATERIAL IS FOUND ON THE PROJECT, OR ENCOUNTERED DURING CONSTRUCTION, IMMEDIATELY NOTIFY THE TOWN OF SURFSIDE ENGINEERNG REPRESENTATIVE, BOB MCSWEENEY, OF CALVIN, GIORDANO & ASSOCIATES, INC. AT 954-921-7781.

16. CONTRACTOR SHALL SUBMIT PLAN FOR APPROVAL TO PLACE FILTER FABRIC. THE FABRIC MUST BE IN CONTACT WITH THE SHEET PILE TO A DEPTH OF 2' BENEATH THE MUDLINE. THE METHOD MUST DEMONSTRATE SUCCESSFUL ACCOMPLISHMENT TO THE SATISFACTION OF THE ENGINEER.

17. FILTER FABRIC SHALL BE MIRAFI 700X OR EQUAL WITH EQUIVALENT AOS, RUPTURE, WEIGHT, ABRASION RESISTANCE.

18. REINFORCING STEEL IN CONCRETE PANELS AND CAP SHALL BE MMFX$_2$.

19. EXISTING SEAWALLS, INCLUDING BATTER PILES, KING PILES, CAP AND CONCRETE PANELS TO BE DEMOLISHED TO THE EXTENT NECESSARY FOR CONSTRUCTION. DEMOLISHED SEAWALL TO BE DISPOSED OF PROPERLY.

20. CONCRETE PILE INSTALLATION INCLUDING VERIFICATION OF DEPTH OF PILES REQUIRES SPECIAL GEOTECHNICAL INSPECTOR FROM THE TOWN OF SURFSIDE.

21. RIPRAP WILL BE INSTALLED ALONG THE ENTIRE LENGTH OF EACH SEAWALL SEGMENT FOR A TOTAL LENGTH OF 681 LINEAR FEET EXCEPT WHERE PIPE PENETRATIONS EXIST. RIPRAP WILL BE INSTALLED AT 1 CUBIC YARD PER LINEAR FOOT OF SEAWALL WHERE FEASIBLE DEPENDENT UPON THE WATER DEPTH. RIPRAP SHALL NOT EXTEND BEYOND 8' WATERWARD OF SEAWALL AT ALL LOCATIONS EXCEPT AT FROUDE AVE. WHERE RIPRAP SHALL NOT EXTEND BEYOND 7' WATERWARD OF SEAWALL.

22. LANDSCAPING EXISTS AT STREET ENDS BUT IS NOT DEPICTED ON THESE PLANS FOR CLARITY. CONTRACTOR IS RESPONSIBLE FOR RESTORING LANDSCAPING DAMAGED DURING CONSTRUCTION TO PRE-EXISTING CONDITIONS.

KNOW WHAT'S BELOW ALWAYS CALL 811 BEFORE YOU DIG
It's fast, It's free, It's the law.
www.callsunshine.com

FOR BIDDING PURPOSES ONLY

NO	DATE	REVISION	BY	NO	DATE	REVISION	BY

DESIGNED D.F. DATE 02-09-2013
CHECKED D.F. DATE 02-09-2013
ISSUED FOR BIDDING DATE 04-30-2014

Calvin, Giordano & Associates, Inc.
EXCEPTIONAL SOLUTIONS ™
560 Village Boulevard • Suite 340 • West Palm Beach, FL 33409
Phone: 561.684.6161 • Fax: 561.684.6360
Certificate of Authorization 514

SURFSIDE SEAWALL DESIGN

TOWN OF SURFSIDE, FLORIDA

GENERAL NOTES

DAVID W. FRODSHAM, P.E.
STATE OF FLORIDA PROFESSIONAL ENGINEER
LICENSE No. 75507
DATE: 4/30/2014

SCALE: SHOWN ON DWG
PROJECT No: 12-6247
PURPOSE OF THIS SET: FOR BIDDING PURPOSES ONLY
SHEET: 2
G2
14

File Name: P:\Projects\2012\125247 Surfside Seawall Design\CADD Files\Drawings\125247-02-G2-GNNTSR01.dwg - (Plotted by: Curt Alexander on Thursday, May 01, 2014 10:45:33 AM)

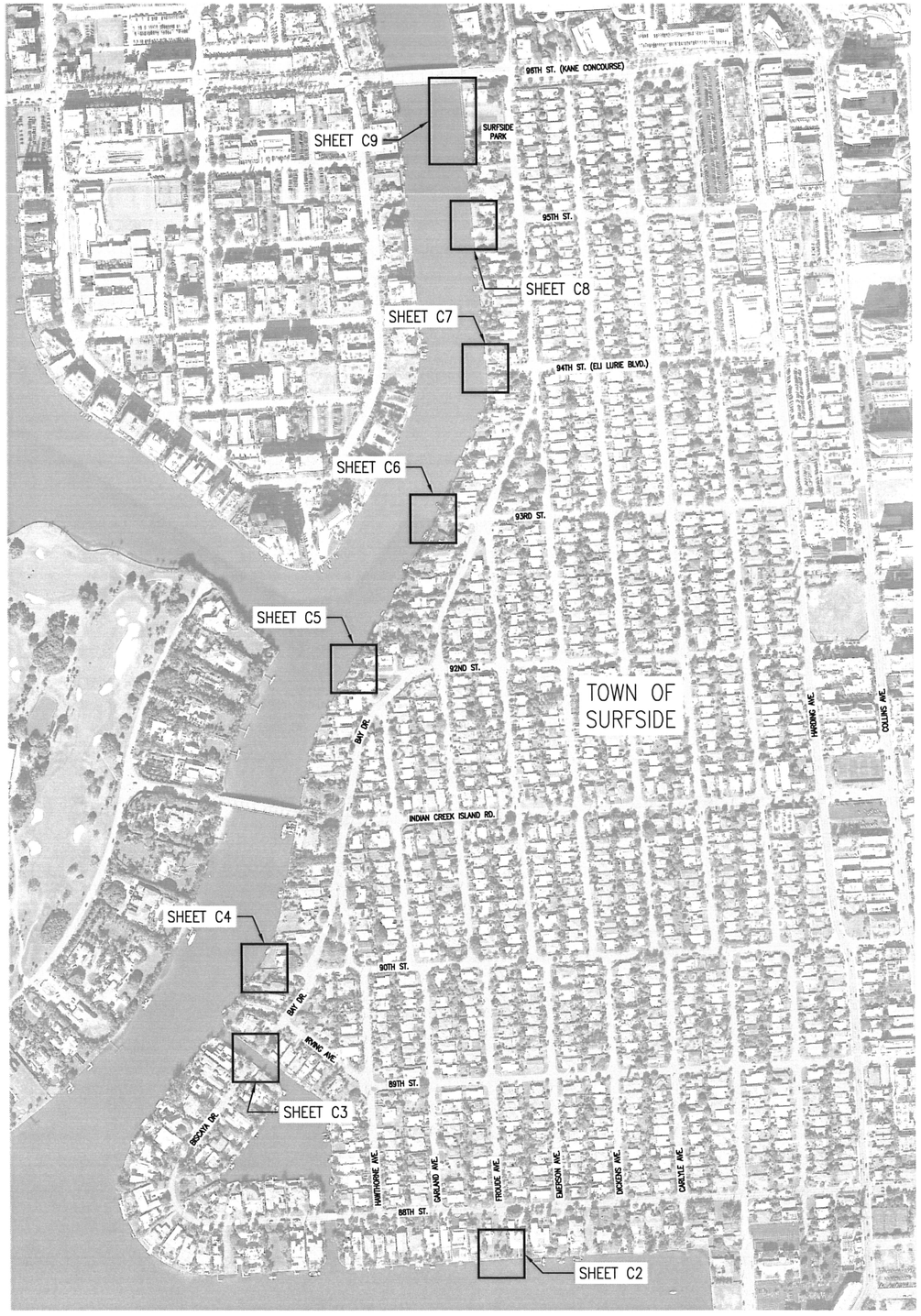

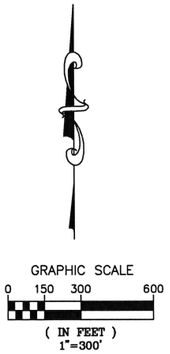

FOR BIDDING PURPOSES ONLY

811 KNOW WHAT'S BELOW ALWAYS CALL 811 BEFORE YOU DIG
It's fast. It's free. It's the law.
www.callsunshine.com

NO	DATE	REVISION	BY	NO	DATE	REVISION	BY

DESIGNED D.F. DATE 02-09-2013
CHECKED D.F. DATE 02-09-2013
ISSUED FOR BIDDING DATE 04-30-2014

Calvin, Giordano & Associates, Inc.
EXCEPTIONAL SOLUTIONS
560 Village Boulevard • Suite 340 • West Palm Beach, FL 33409
Phone: 561.684.6161 • Fax: 561.684.6360
Certificate of Authorization 514

SURFSIDE SEAWALL DESIGN

TOWN OF SURFSIDE, FLORIDA

KEY PLAN

DAVID W. FRODSHAM, P.E.
STATE OF FLORIDA PROFESSIONAL ENGINEER
LICENSE No. 75507
DATE: 4/30/2014

SCALE: SHOWN ON DWG
PROJECT No: 12-5247
PURPOSE OF THIS SET: FOR BIDDING PURPOSES ONLY

SHEET: 3
C1
14

File Name: P:\Projects\2012\125247 Surfside Seawall Design\CADD Files\Drawings\125247-03-C1-SP-KEY.dwg – (Plotted by: Curt Alexander on Thursday, May 01, 2014 11:03:11 AM)

GRAPHIC SCALE

0 5 10 20

(IN FEET)
1"=10'

LEGEND

	RIGHT OF WAY / PROPERTYLINE
xSSTRM	EXISTING STORMWATER
xSWM	EXISTING WATER MAIN
xOE	EXISTING OVERHEAD ELECTRIC
xUGE	EXISTING UNDERGROUND ELECTRIC
	EXISTING UTILITY POLE
LP	EXISTING LIGHT POLE
24" PVC	PROPOSED STORMWATER
	FLOATING TURBIDITY BARRIER
	SILT FENCE
	PROPOSED SEAWALL

NOTE:

1. ALL ELEVATIONS REFERENCED TO NATIONAL GEODETIC VERTICAL DATUM (NGVD) 1929.

2. MAINTAIN MINIMUM OPEN CHANNEL WIDTH OF 50' AT TOIB

FROUDE AVE. NOTES:

LENGTH OF PROPOSED SEAWALL: 50.0'

LENGTH OF PROPOSED CAP: 50.0'

REQUIRED LENGTH OF CONCRETE PANELS: 13'

ELEVATION OF PROPOSED TOP OF CAP: +4.7'

ELEVATION OF TOP OF PROPOSED KING & BATTER PILES: +3.95'

CONSTRUCTION AT THIS LOCATION MUST BE PERFORMED FROM LAND

PROPOSED RIP RAP AT THIS LOCATION NOT TO EXTEND MORE THAN 7 FT IN FRONT OF WALL

811 KNOW WHAT'S BELOW ALWAYS CALL 811 BEFORE YOU DIG
It's fast. It's free. It's the law.
www.callsunshine.com

FOR BIDDING PURPOSES ONLY

NO	DATE	REVISION	BY	NO	DATE	REVISION	BY

DESIGNED	D.F.	02-09-2013
CHECKED	D.F.	02-09-2013
ISSUED FOR	BIDDING	04-30-2014

Calvin, Giordano & Associates, Inc.
EXCEPTIONAL SOLUTIONS
560 Village Boulevard •Suite 340 •West Palm Beach, FL 33409
Phone: 561.684.6161 • Fax: 561.684.6360
Certificate of Authorization 514

SURFSIDE SEAWALL DESIGN

TOWN OF SURFSIDE, FLORIDA

SITE PLAN (FROUDE AVE.)

DAVID W. FRODSHAM, P.E.
STATE OF FLORIDA PROFESSIONAL ENGINEER
LICENSE No. 75507

DATE: 4/30/2014

SCALE: SHOWN ON DWG
PROJECT No: 12-5247
PURPOSE OF THIS SET: FOR BIDDING PURPOSES ONLY

SHEET: 4
C2
14

File Name: P:\Projects\2012\125247 Surfside Seawall Design\CADD Files\Drawings\125247-04-11-C2-C9-SW1.dwg – (Plotted by: Curt Alexander on Thursday, May 01, 2014 11:02:48 AM)

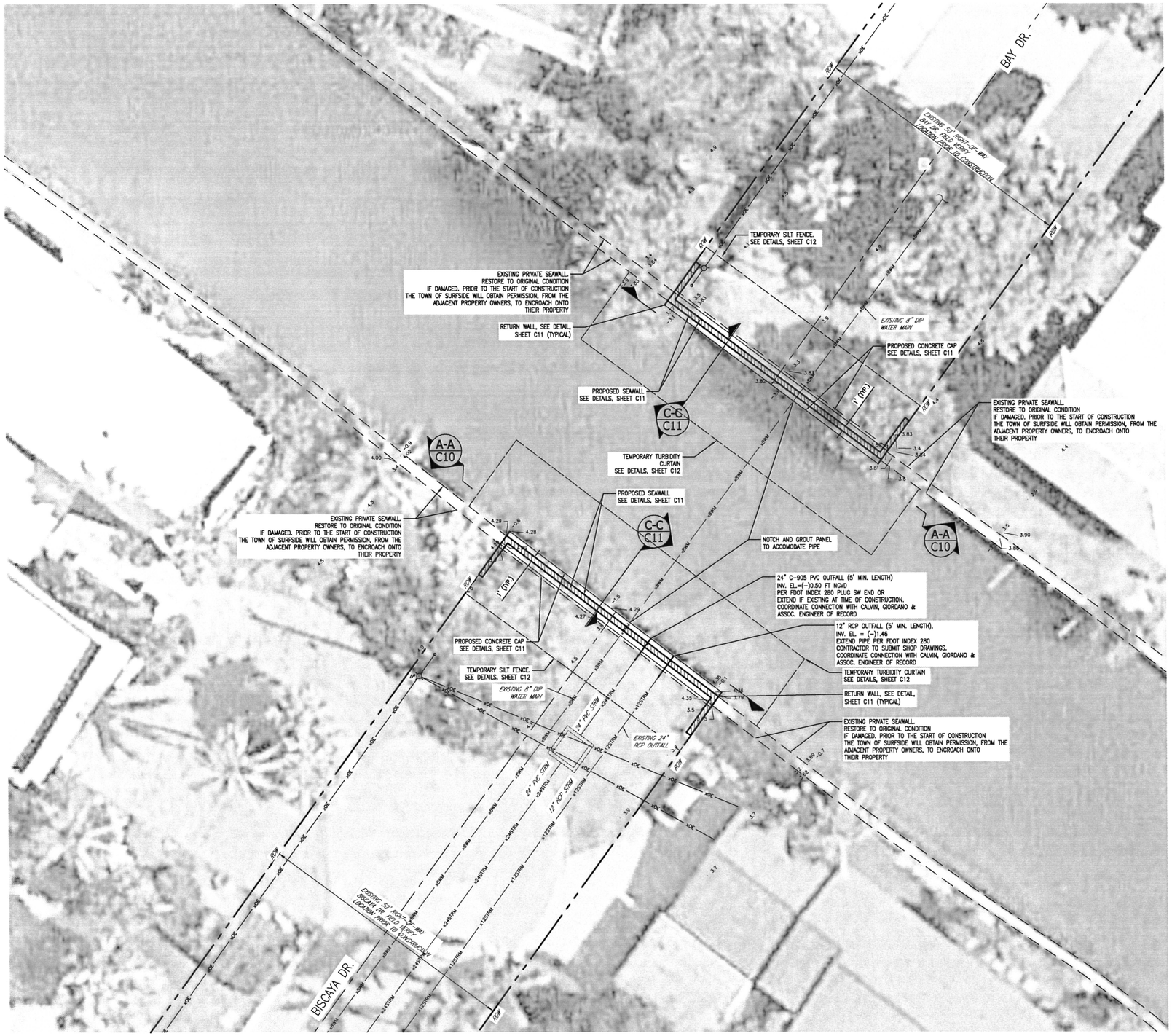

LEGEND

- RIGHT OF WAY / PROPERTYLINE
- EXISTING STORMWATER
- EXISTING WATER MAIN
- EXISTING OVERHEAD ELECTRIC
- EXISTING UNDERGROUND ELECTRIC
- EXISTING UTILITY POLE
- EXISTING LIGHT POLE
- 24" PVC — PROPOSED STORMWATER
- FLOATING TURBIDITY BARRIER
- SILT FENCE
- PROPOSED SEAWALL

GRAPHIC SCALE

0 5 10 20

(IN FEET)
1"=10'

NOTE:

1. ALL ELEVATIONS REFERENCED TO NATIONAL GEODETIC VERTICAL DATUM (NGVD) 1929.
2. MAINTAIN MINIMUM OPEN CHANNEL WIDTH OF 30' AT THIS LOCATION DURING CONSTRUCTION.
3. SEAWALLS AT THESE TWO LOCATIONS TO BE REPLACED IN EXISTING FOOTPRINT.

BAY DR. NOTES:

LENGTH OF PROPOSED SEAWALL: 50.0'

LENGTH OF PROPOSED CAP: 50.0'

REQUIRED LENGTH OF CONCRETE PANELS: 12'

ELEVATION OF PROPOSED TOP OF CAP: +4.7'

ELEVATION OF TOP OF PROPOSED KING & BATTER PILES: +3.95'

BISCAYA DR. NOTES:

LENGTH OF PROPOSED SEAWALL: 50.0'

LENGTH OF PROPOSED CAP: 50.0'

REQUIRED LENGTH OF CONCRETE PANELS: 13'

ELEVATION OF PROPOSED TOP OF CAP: +4.7'

ELEVATION OF TOP OF PROPOSED KING & BATTER PILES: +3.95'

811 KNOW WHAT'S BELOW ALWAYS CALL 811 BEFORE YOU DIG
It's fast. It's free. It's the law.
www.callsunshine.com

FOR BIDDING PURPOSES ONLY

NO	DATE	REVISION	BY	NO	DATE	REVISION	BY

DESIGNED D.F. DATE 02-09-2013
CHECKED D.F. DATE 02-09-2013
ISSUED FOR BIDDING DATE 04-30-2014

Calvin, Giordano & Associates, Inc.
EXCEPTIONAL SOLUTIONS
560 Village Boulevard • Suite 340 • West Palm Beach, FL 33409
Phone: 561.684.6161 • Fax: 561.684.6360
Certificate of Authorization 514

SURFSIDE SEAWALL DESIGN

TOWN OF SURFSIDE, FLORIDA

SITE PLAN (BISCAYA DR./BAY DR.)

DAVID W. FRODSHAM, P.E.
STATE OF FLORIDA PROFESSIONAL ENGINEER
LICENSE No. 75507

DATE: 4/30/2014

SCALE: SHOWN ON DWG
PROJECT No: 12-5247
PURPOSE OF THIS SET: FOR BIDDING PURPOSES ONLY

SHEET: 5
C3
14

File Name: P:\Projects\2012\125247 Surfside Seawall Design\CADD Files\Drawings\125247-04-11-C2-C9-SWLL.dwg - (Plotted by: Curt Alexander on Thursday, May 01, 2014 11:01:36 AM)

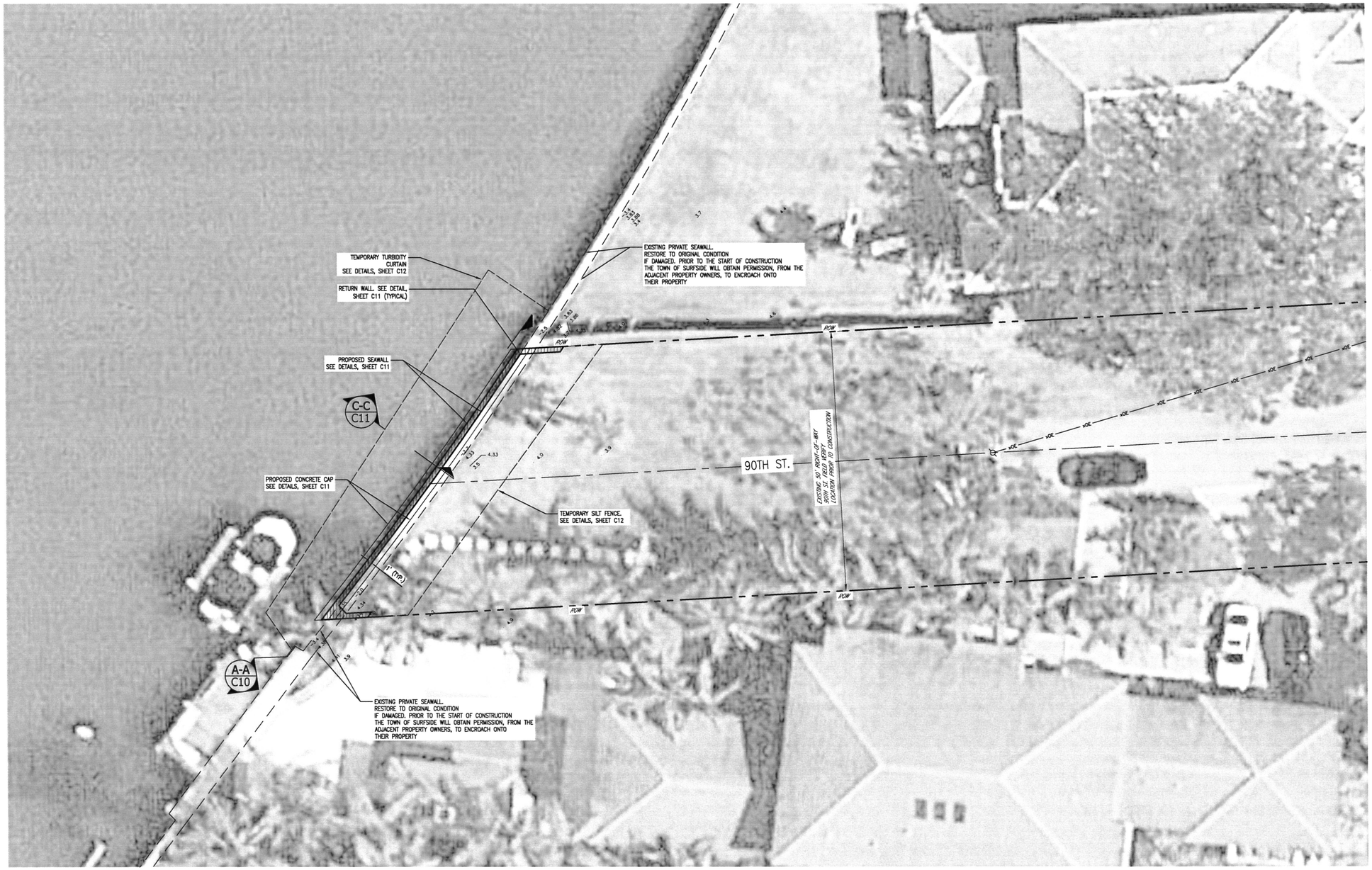

GRAPHIC SCALE

0 5 10 20

(IN FEET)
1"=10'

LEGEND

	RIGHT OF WAY / PROPERTYLINE
xSSTRM	EXISTING STORMWATER
xSWM	EXISTING WATER MAIN
xOE	EXISTING OVERHEAD ELECTRIC
xUGE	EXISTING UNDERGROUND ELECTRIC
	EXISTING UTILITY POLE
LP	EXISTING LIGHT POLE
24" PVC	PROPOSED STORMWATER
	FLOATING TURBIDITY BARRIER
	SILT FENCE
	PROPOSED SEAWALL

NOTE:

1. ALL ELEVATIONS REFERENCED TO NATIONAL GEODETIC VERTICAL DATUM (NGVD) 1929.

2. MAINTAIN MINIMUM OPEN CHANNEL WIDTH OF 50' AT TURB

90TH ST. NOTES:

LENGTH OF PROPOSED SEAWALL: 84.7'

LENGTH OF PROPOSED CAP: 84.7'

REQUIRED LENGTH OF CONCRETE PANELS: 12'

ELEVATION OF PROPOSED TOP OF CAP: +4.7'

ELEVATION OF TOP OF PROPOSED KING & BATTER PILES: +3.95'

811 KNOW WHAT'S BELOW ALWAYS CALL 811 BEFORE YOU DIG
It's fast. It's free. It's the law.
www.callsunshine.com

FOR BIDDING PURPOSES ONLY

NO	DATE	REVISION	BY	NO	DATE	REVISION	BY

DESIGNED D.F. DATE 02-09-2013
CHECKED D.F. DATE 02-09-2013
ISSUED FOR BIDDING DATE 04-30-2014

Calvin, Giordano & Associates, Inc.
EXCEPTIONAL SOLUTIONS
560 Village Boulevard • Suite 340 • West Palm Beach, FL 33409
Phone: 561.684.6161 • Fax: 561.684.6360
Certificate of Authorization 514

SURFSIDE SEAWALL DESIGN

TOWN OF SURFSIDE, FLORIDA

SITE PLAN (90TH ST.)

DAVID W. FRODSHAM, P.E.
STATE OF FLORIDA PROFESSIONAL ENGINEER
LICENSE No. 75507

DATE: 4/30/2014

SCALE SHOWN ON DWG
PROJECT No 12-5247
PURPOSE OF THIS SET FOR BIDDING PURPOSES ONLY

SHEET: 6 **C4** 14

File Name: P:\Projects\2012\125247 Surfside Seawall Design\CADD Files\Drawings\125247-04-11-C2-C9-SWLL.dwg – (Plotted by: Curt Alexander on Thursday, May 01, 2014 11:04:48 AM)

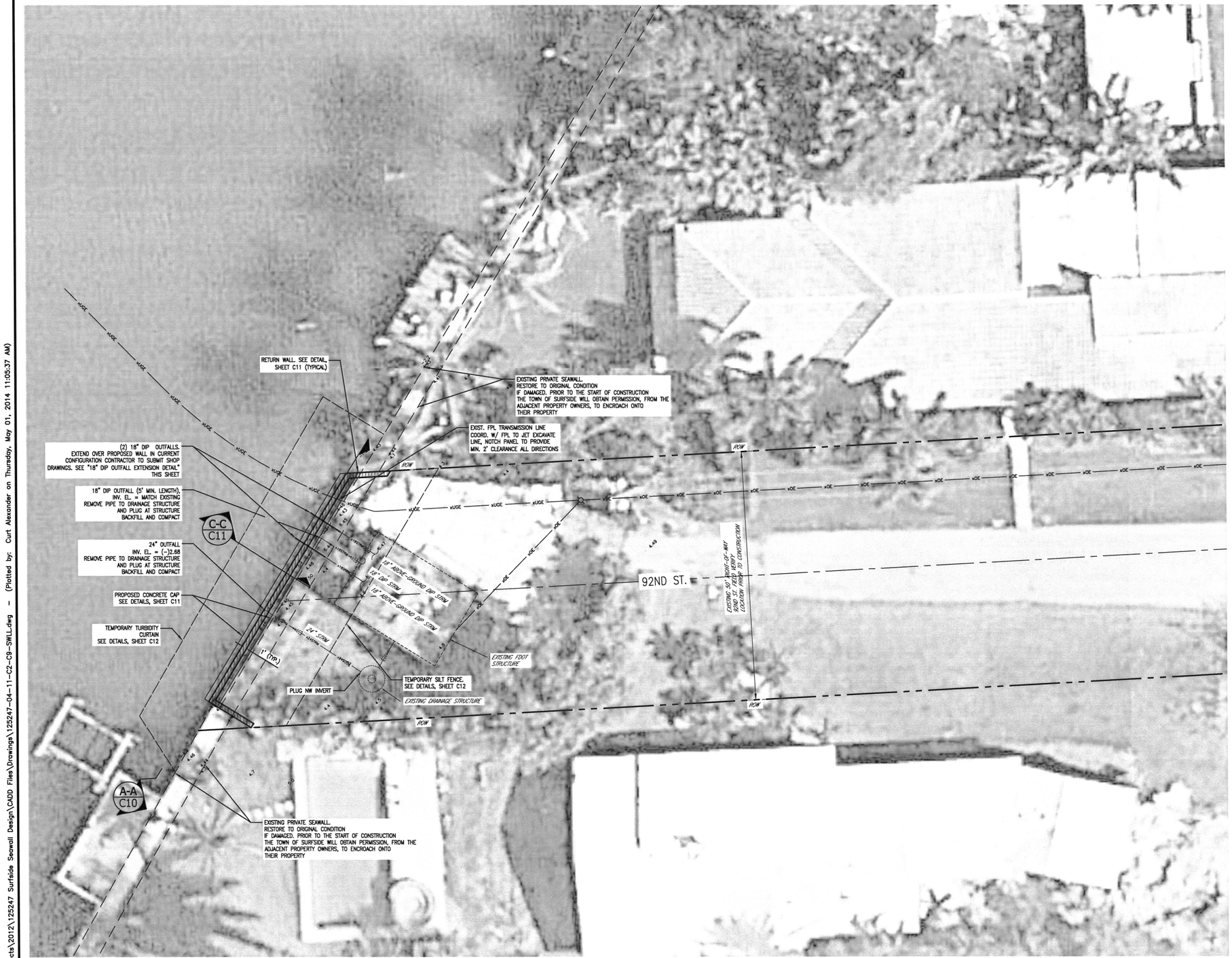

LEGEND

- RIGHT OF WAY / PROPERTYLINE
- EXISTING STORMWATER
- EXISTING WATER MAIN
- EXISTING OVERHEAD ELECTRIC
- EXISTING UNDERGROUND ELECTRIC
- EXISTING UTILITY POLE
- EXISTING LIGHT POLE
- 24" PVC — PROPOSED STORMWATER
- FLOATING TURBIDITY BARRIER
- SILT FENCE
- PROPOSED SEAWALL

GRAPHIC SCALE

0 5 10 20

(IN FEET)
1"=10'

NOTE:

1. ALL ELEVATIONS REFERENCED TO NATIONAL GEODETIC VERTICAL DATUM (NGVD) 1929.

92ND ST. NOTES:

LENGTH OF PROPOSED SEAWALL: 53.8'

LENGTH OF PROPOSED CAP: 53.8'

REQUIRED LENGTH OF CONCRETE PANELS: 13'

ELEVATION OF PROPOSED TOP OF CAP: +5.0'

ELEVATION OF TOP OF PROPOSED KING & BATTER PILES: +4.25'

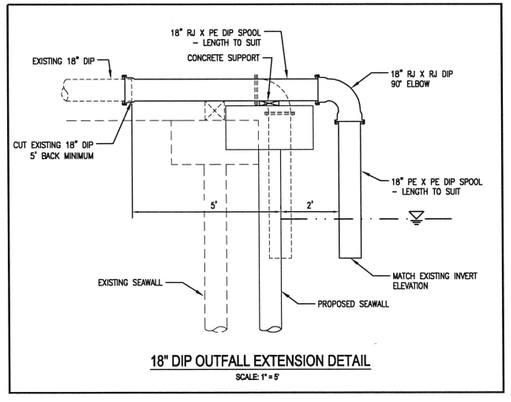

18" DIP OUTFALL EXTENSION DETAIL

SCALE: 1" = 5'

FOR BIDDING PURPOSES ONLY

811 KNOW WHAT'S BELOW ALWAYS CALL 811 BEFORE YOU DIG
It's fast. It's free. It's the law.
www.callsunshine.com

NO	DATE	REVISION	BY	NO	DATE	REVISION	BY

DESIGNED D.F. DATE 02-09-2013
CHECKED D.F. DATE 02-09-2013
ISSUED FOR BIDDING DATE 04-30-2014

Calvin, Giordano & Associates, Inc.
EXCEPTIONAL SOLUTIONS
560 Village Boulevard • Suite 340 • West Palm Beach, FL 33409
Phone: 561.684.6161 • Fax: 561.684.6360
Certificate of Authorization 514

SURFSIDE SEAWALL DESIGN

TOWN OF SURFSIDE, FLORIDA

SITE PLAN (92ND ST.)

DAVID W. FRODSHAM, P.E.
STATE OF FLORIDA PROFESSIONAL ENGINEER
LICENSE No. 75507

DATE: 4/30/2014

SCALE SHOWN ON DWG
PROJECT No 12-5247
PURPOSE OF THIS SET FOR BIDDING PURPOSES ONLY

SHEET: 7
C5
14

File Name: P:\Projects\2012\125247 Surfside Seawall Design\CADD Files\Drawings\125247-04-11-C2-C9-SWLL.dwg – (Plotted by: Curt Alexander on Thursday, May 01, 2014 11:05:37 AM)

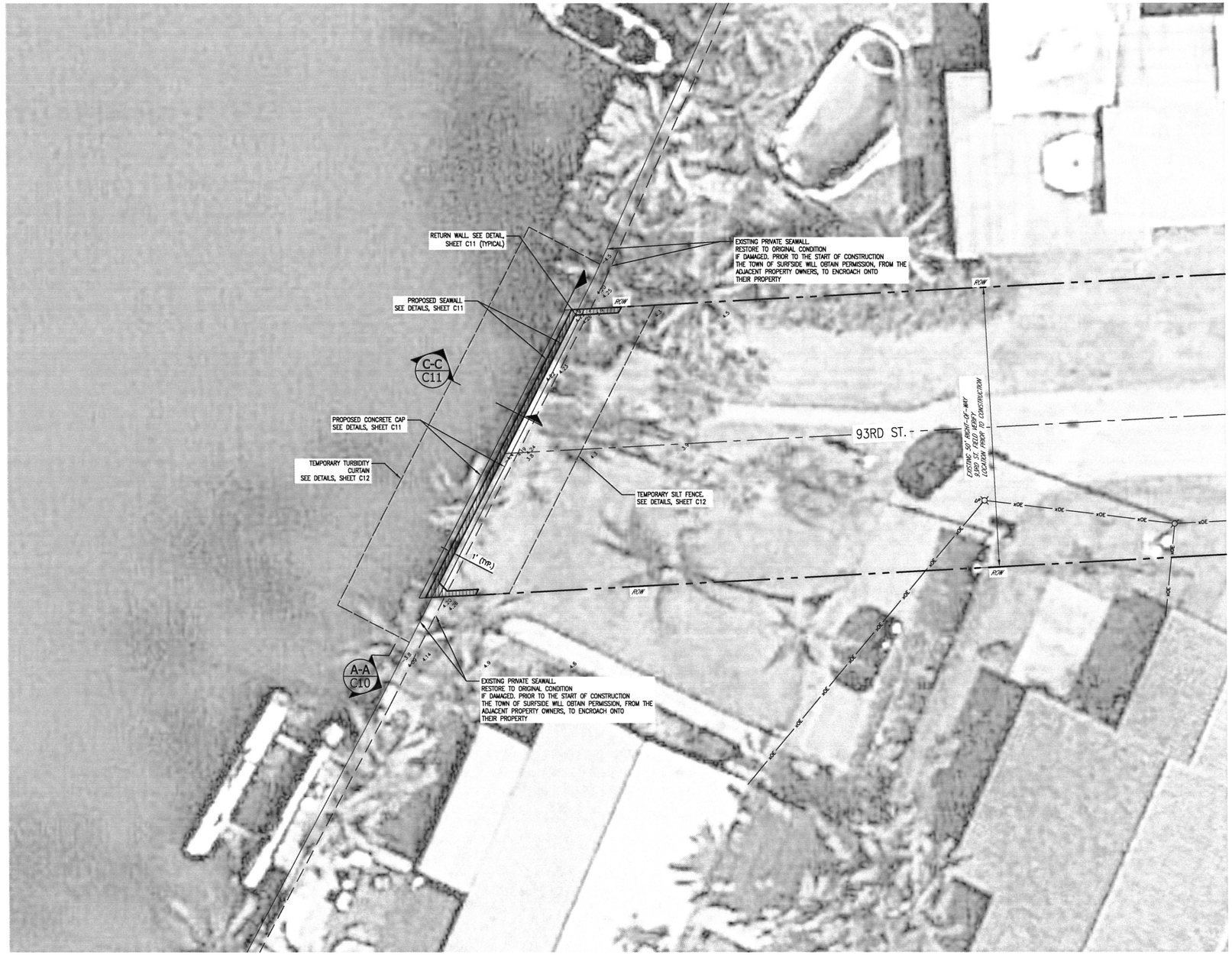

GRAPHIC SCALE

0 5 10 20

(IN FEET)
1"=10'

LEGEND

	RIGHT OF WAY / PROPERTYLINE
x36STRM	EXISTING STORMWATER
xSWM	EXISTING WATER MAIN
xOE	EXISTING OVERHEAD ELECTRIC
xUGE	EXISTING UNDERGROUND ELECTRIC
	EXISTING UTILITY POLE
LP	EXISTING LIGHT POLE
24" PVC	PROPOSED STORMWATER
	FLOATING TURBIDITY BARRIER
	SILT FENCE
	PROPOSED SEAWALL

NOTE:

1. ALL ELEVATIONS REFERENCED TO NATIONAL GEODETIC VERTICAL DATUM (NGVD) 1929.

2. MAINTAIN MINIMUM OPEN CHANNEL WIDTH OF 90' AT THIS

93RD ST. NOTES:

LENGTH OF PROPOSED SEAWALL: 57.9'

LENGTH OF PROPOSED CAP: 57.9'

REQUIRED LENGTH OF CONCRETE PANELS: 15'

ELEVATION OF PROPOSED TOP OF CAP: +4.7'

ELEVATION OF TOP OF PROPOSED KING & BATTER PILES: +3.95'

KNOW WHAT'S BELOW ALWAYS CALL 811 BEFORE YOU DIG
It's fast. It's free. It's the law.
www.callsunshine.com

FOR BIDDING PURPOSES ONLY

NO	DATE	REVISION	BY	NO	DATE	REVISION	BY

DESIGNED D.F. DATE 02-09-2013
CHECKED D.F. DATE 02-09-2013
ISSUED FOR BIDDING DATE 04-30-2014

Calvin, Giordano & Associates, Inc.
EXCEPTIONAL SOLUTIONS™
560 Village Boulevard • Suite 340 • West Palm Beach, FL 33409
Phone: 561.684.6161 • Fax: 561.684.6360
Certificate of Authorization 514

SURFSIDE SEAWALL DESIGN

TOWN OF SURFSIDE, FLORIDA

SITE PLAN (93RD ST.)

DAVID W. FRODSHAM, P.E.
STATE OF FLORIDA PROFESSIONAL ENGINEER
LICENSE No. 75507
DATE: 4/30/2014

SCALE: SHOWN ON DWG
PROJECT No: 12-5247
PURPOSE OF THIS SET: FOR BIDDING PURPOSES ONLY

SHEET: 8
C6
14

File Name: P:\Projects\2012\125247 Surfside Seawall Design\CADD Files\Drawings\125247-04-11-C2-C9-SWLL.dwg – (Plotted by: Curt Alexander on Thursday, May 01, 2014 11:06:21 AM)

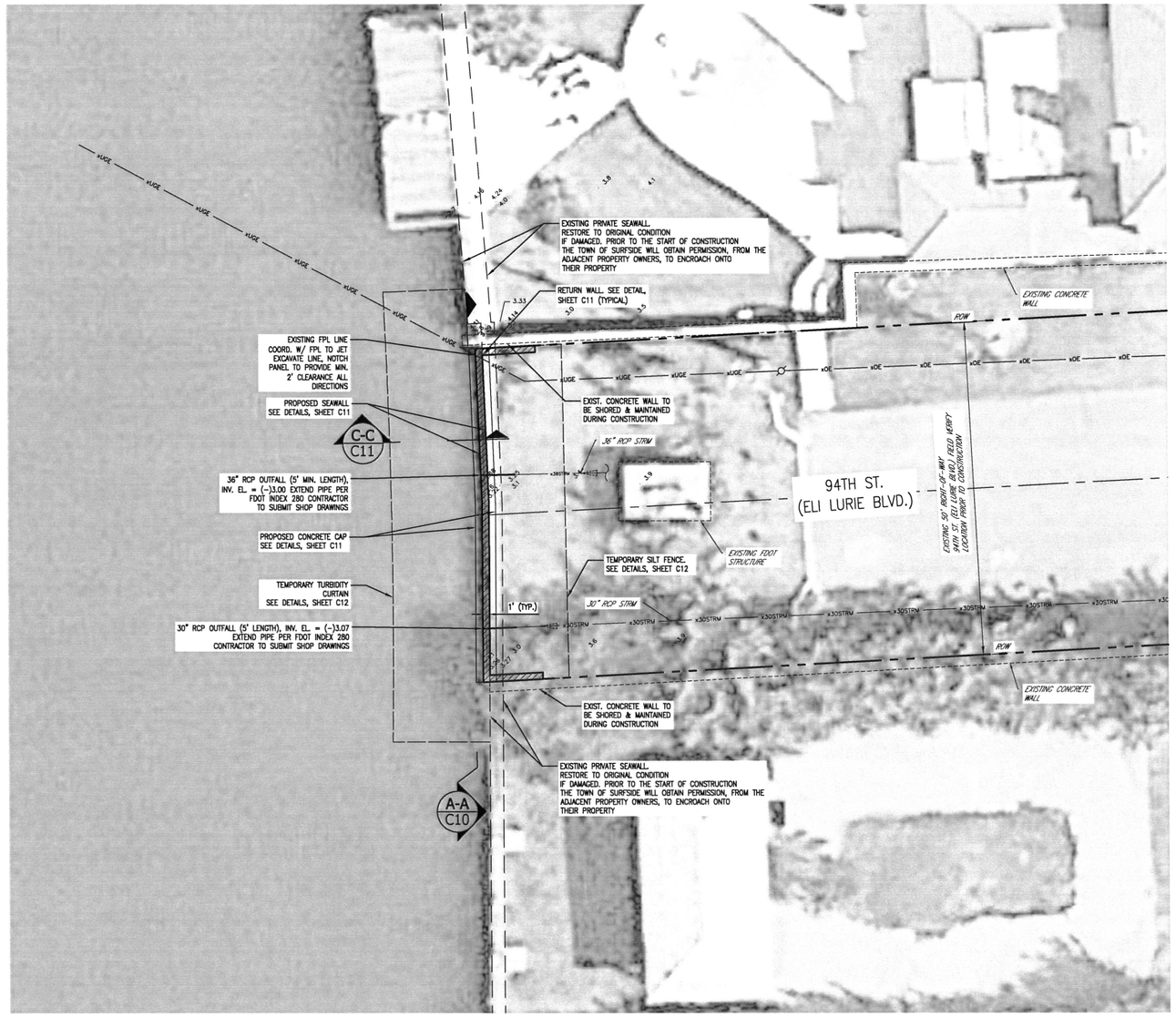

GRAPHIC SCALE

0 5 10 20

(IN FEET)
1"=10'

LEGEND

	RIGHT OF WAY / PROPERTYLINE
x36STRM	EXISTING STORMWATER
xBWM	EXISTING WATER MAIN
xOE	EXISTING OVERHEAD ELECTRIC
xUGE	EXISTING UNDERGROUND ELECTRIC
	EXISTING UTILITY POLE
	EXISTING LIGHT POLE
24" PVC	PROPOSED STORMWATER
	FLOATING TURBIDITY BARRIER
	SILT FENCE
	PROPOSED SEAWALL

NOTE:

1. ALL ELEVATIONS REFERENCED TO NATIONAL GEODETIC VERTICAL DATUM (NGVD) 1929.

2. MAINTAIN MINIMUM OPEN CHANNEL WIDTH OF 20' AT THIS

94TH ST./(ELI LURIE BLVD.) NOTES:

LENGTH OF PROPOSED SEAWALL: 50.0'

LENGTH OF PROPOSED CAP: 50.0'

REQUIRED LENGTH OF CONCRETE PANELS: 13'

ELEVATION OF PROPOSED TOP OF CAP: +4.7'

ELEVATION OF TOP OF PROPOSED KING & BATTER PILES: +3.95'

OUTFALL PIPE AT THIS LOCATION TO BE COVERED WITH MANATEE GRATE

KNOW WHAT'S BELOW ALWAYS CALL 811 BEFORE YOU DIG
It's fast. It's free. It's the law.
www.callsunshine.com

FOR BIDDING PURPOSES ONLY

NO	DATE	REVISION	BY	NO	DATE	REVISION	BY

DESIGNED D.F. DATE 02-09-2013
CHECKED D.F. DATE 02-09-2013
ISSUED FOR BIDDING DATE 04-30-2014

Calvin, Giordano & Associates, Inc.
EXCEPTIONAL SOLUTIONS™
560 Village Boulevard • Suite 340 • West Palm Beach, FL 33409
Phone: 561.684.6161 • Fax: 561.684.6360
Certificate of Authorization 514

SURFSIDE SEAWALL DESIGN

TOWN OF SURFSIDE, FLORIDA

SITE PLAN (94TH ST.)

DAVID W. FRODSHAM, P.E.
STATE OF FLORIDA PROFESSIONAL ENGINEER
LICENSE No. 75507

DATE: 4/30/2014

SCALE SHOWN ON DWG
PROJECT No 12-5247
PURPOSE OF THIS SET FOR BIDDING PURPOSES ONLY

SHEET: 9
C7
14

File Name: P:\Projects\2012\125247 Surfside Seawall Design\CADD Files\Drawings\125247-04-11-C2-C9-SWLL.dwg – (Plotted by: Curt Alexander on Thursday, May 01, 2014 11:07:08 AM)

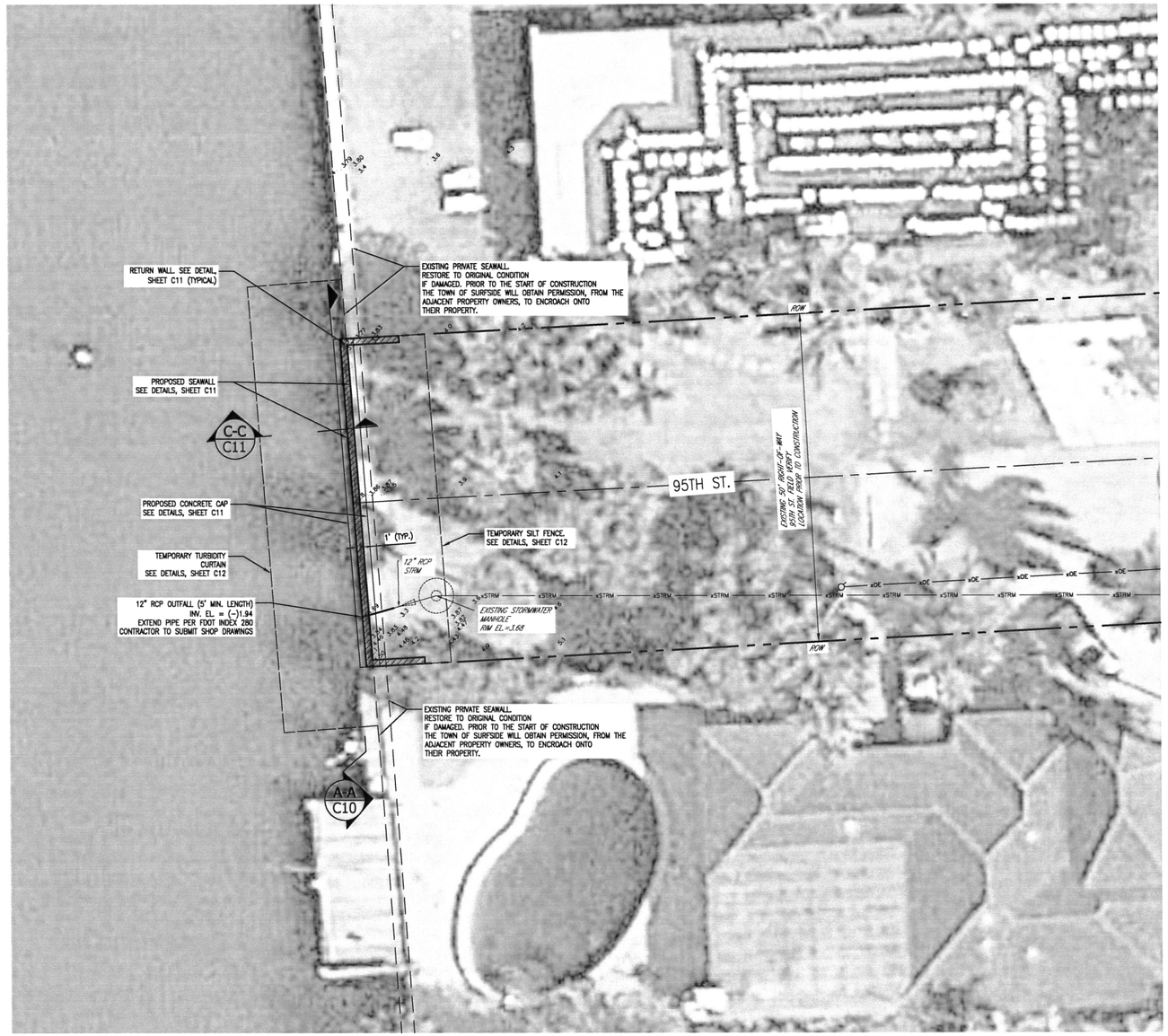

GRAPHIC SCALE

0 5 10 20

(IN FEET)
1"=10'

LEGEND

- RIGHT OF WAY / PROPERTYLINE
- EXISTING STORMWATER
- EXISTING WATER MAIN
- EXISTING OVERHEAD ELECTRIC
- EXISTING UNDERGROUND ELECTRIC
- EXISTING UTILITY POLE
- EXISTING LIGHT POLE
- 24" PVC — PROPOSED STORMWATER
- FLOATING TURBIDITY BARRIER
- SILT FENCE
- PROPOSED SEAWALL

NOTE:

1. ALL ELEVATIONS REFERENCED TO NATIONAL GEODETIC VERTICAL DATUM (NGVD) 1929.
2. MAINTAIN MINIMUM OPEN CHANNEL WIDTH OF 20' AT THIS

95TH ST. NOTES:

LENGTH OF PROPOSED SEAWALL: 50.0'

LENGTH OF PROPOSED CAP: 50.0'

REQUIRED LENGTH OF CONCRETE PANELS: 15'

ELEVATION OF PROPOSED TOP OF CAP: +4.7'

ELEVATION OF TOP OF PROPOSED KING & BATTER PILES: +3.95'

OUTFALL PIPE AT THIS LOCATION TO BE COVERED WITH MANATEE GRATE

811 KNOW WHAT'S BELOW ALWAYS CALL 811 BEFORE YOU DIG
It's best. It's free. It's the law.
www.callsunshine.com

FOR BIDDING PURPOSES ONLY

NO	DATE	REVISION	BY	NO	DATE	REVISION	BY

DESIGNED D.F. DATE 02-09-2013
CHECKED D.F. DATE 02-09-2013
ISSUED FOR BIDDING DATE 04-30-2014

Calvin, Giordano & Associates, Inc.
EXCEPTIONAL SOLUTIONS
560 Village Boulevard • Suite 340 • West Palm Beach, FL 33409
Phone: 561.684.6161 • Fax: 561.684.6360
Certificate of Authorization 514

SURFSIDE SEAWALL DESIGN

TOWN OF SURFSIDE, FLORIDA

SITE PLAN (95TH ST.)

DAVID W. FRODSHAM, P.E.
STATE OF FLORIDA PROFESSIONAL ENGINEER
LICENSE No. 75507

DATE: 4/30/2014

SCALE SHOWN ON DWG
PROJECT No 12-5247
PURPOSE OF THIS SET FOR BIDDING PURPOSES ONLY

SHEET: 10
C8
14

File Name: P:\Projects\2012\125247 Surfside Seawall Design\CADD Files\Drawings\125247-04-11-C2-C9-SWLL.dwg - (Plotted by: Curt Alexander on Thursday, May 01, 2014 11:08:09 AM)

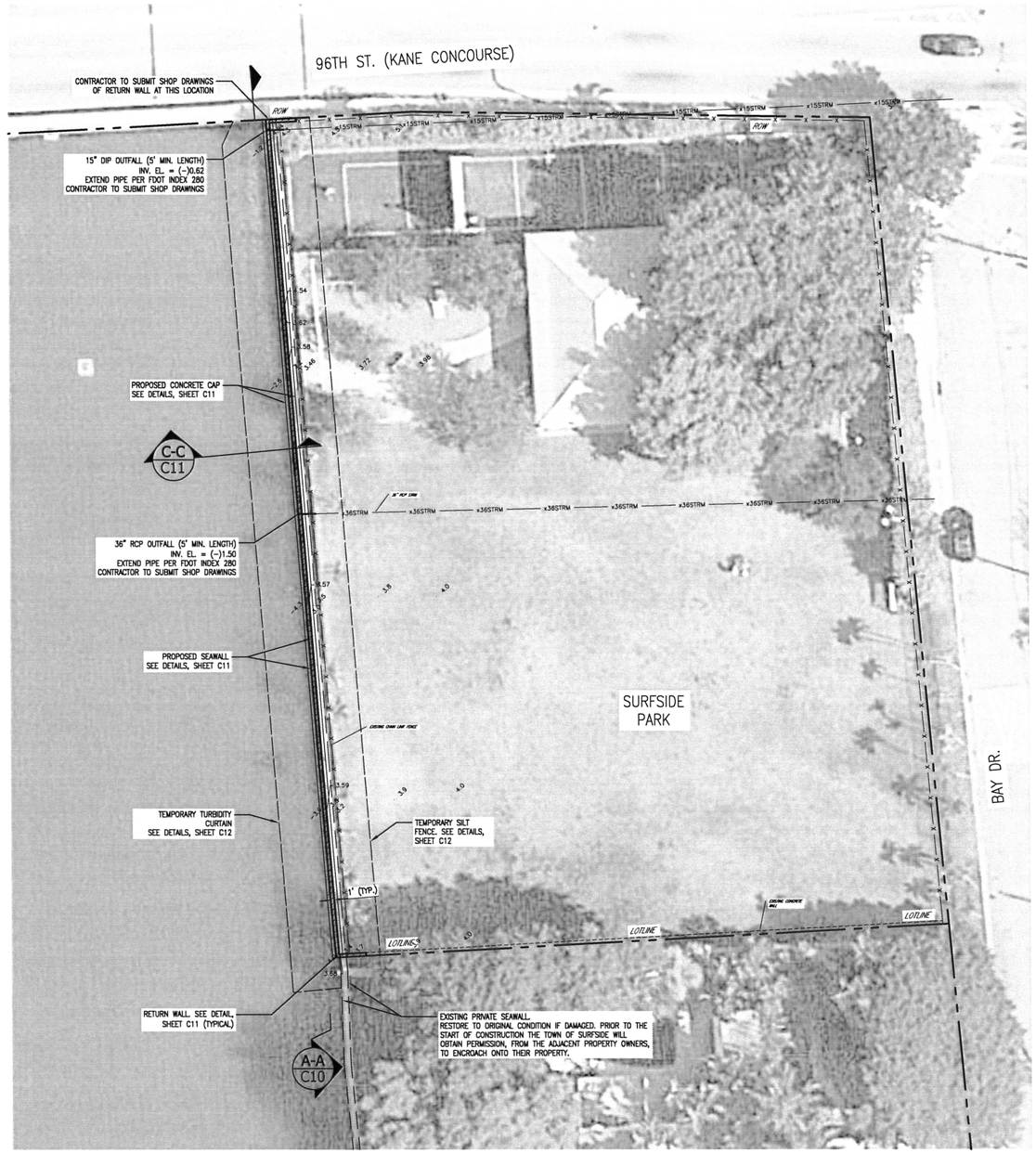

GRAPHIC SCALE

0 10 20 40

(IN FEET)
1"=20'

LEGEND

	RIGHT OF WAY / PROPERTYLINE
x36STRM	EXISTING STORMWATER
xSWM	EXISTING WATER MAIN
xOE	EXISTING OVERHEAD ELECTRIC
xUGE	EXISTING UNDERGROUND ELECTRIC
	EXISTING UTILITY POLE
	EXISTING LIGHT POLE
24" PVC	PROPOSED STORMWATER
	FLOATING TURBIDITY BARRIER
	SILT FENCE
	PROPOSED SEAWALL

NOTE:

1. ALL ELEVATIONS REFERENCED TO NATIONAL GEODETIC VERTICAL DATUM (NGVD) 1929.

2. CONSTRUCTION AT THIS LOCATION MUST BE PERFORMED FROM WATER.

3. CONTRACTOR MUST NOT REMOVE EXISTING SEAWALL AT THIS LOCATION.

4. CONSTRUCTION MUST BE LIMITED TO 1' MAX. IN FRONT OF EXISTING SEAWALL AT THIS LOCATION.

SURFSIDE PARK NOTES:

LENGTH OF PROPOSED SEAWALL: 246.8'

LENGTH OF PROPOSED CAP: 246.8'

REQUIRED LENGTH OF CONCRETE PANELS: 15'

ELEVATION OF PROPOSED TOP OF CAP: +4.7'

ELEVATION OF TOP OF PROPOSED KING & BATTER PILES: +3.95'

KNOW WHAT'S BELOW ALWAYS CALL 811 BEFORE YOU DIG
It's free. It's fast. It's the law.
www.callsunshine.com

FOR BIDDING PURPOSES ONLY

File Name: P:\Projects\2012\125247 Surfside Seawall Design\CADD Files\Drawings\125247-04-11-C2-C9-SWLL.dwg – (Plotted by: Curt Alexander on Thursday, May 01, 2014 11:09:14 AM)

NO	DATE	REVISION	BY	NO	DATE	REVISION	BY

DESIGNED	D.F. 02-09-2013
CHECKED	D.F. 02-09-2013
ISSUED FOR	BIDDING
DATE	04-30-2014

Calvin, Giordano & Associates, Inc.
EXCEPTIONAL SOLUTIONS ™
560 Village Boulevard •Suite 340 •West Palm Beach, FL 33409
Phone: 561.684.6161 •Fax: 561.684.6360
Certificate of Authorization 514

SURFSIDE SEAWALL DESIGN

TOWN OF SURFSIDE, FLORIDA

SITE PLAN (SURFSIDE PARK)

DAVID W. FRODSHAM, P.E.
STATE OF FLORIDA PROFESSIONAL ENGINEER
LICENSE No. 75507

DATE: 4/30/2014

SCALE	SHOWN ON DWG
PROJECT No	12-5247
PURPOSE OF THIS SET	FOR BIDDING PURPOSES ONLY

SHEET: 11

C9

14

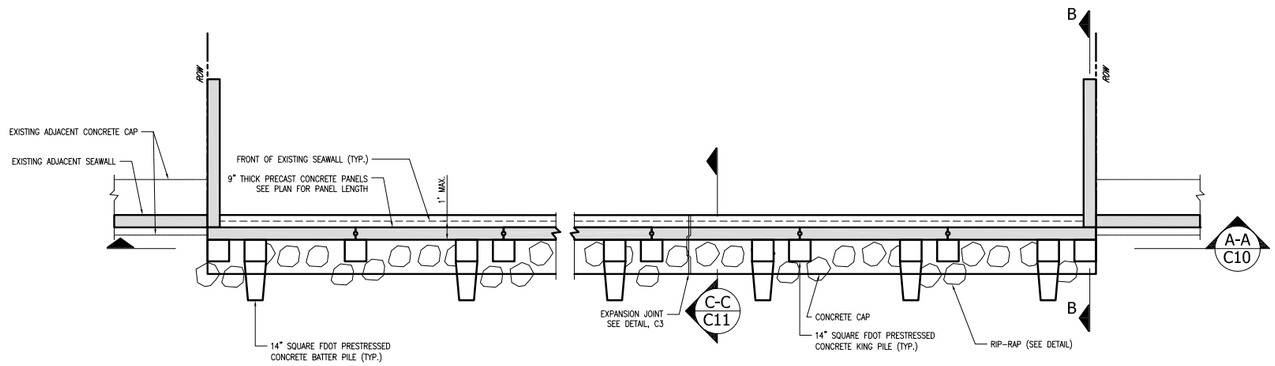

TYPICAL PLAN VIEW
1" = 4'

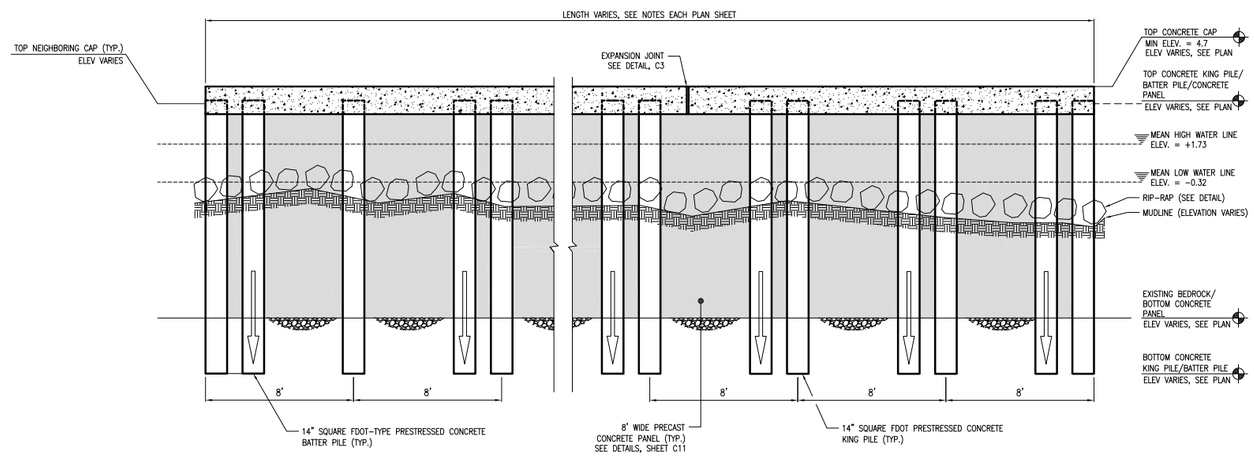

SECTION A-A
1" = 4'

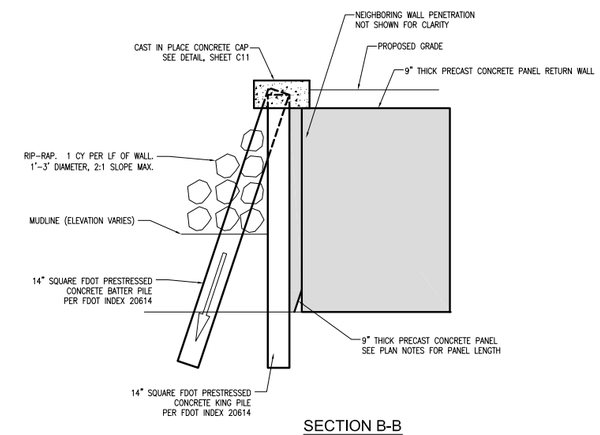

SECTION B-B
1" = 4'

CONSTRUCTION SEQUENCE

1. STAKE OUT CONSTRUCTION AREA.
2. INSTALL ENVIRONMENTAL PROTECTION BARRIERS.
3. DEMOLISH EXISTING SEAWALL TO EXTENT NECESSARY TO CONSTRUCT PROPOSED SEAWALL.
4. INSTALL PROPOSED PILE & PANEL SEAWALL WITH PRECAST RETURN WALL PANELS.
4. INSTALL RIP-RAP.

811 KNOW WHAT'S BELOW ALWAYS CALL 811 BEFORE YOU DIG
It's fast, It's free, It's the law.
www.callsunshine.com

FOR BIDDING PURPOSES ONLY

NO	DATE	REVISION	BY	NO	DATE	REVISION	BY

DESIGNED D.F. DATE 02-09-2013
CHECKED D.F. DATE 02-09-2013
ISSUED FOR BIDDING DATE 04-30-2014

Calvin, Giordano & Associates, Inc.
EXCEPTIONAL SOLUTIONS™
560 Village Boulevard • Suite 340 • West Palm Beach, FL 33409
Phone: 561.684.6161 • Fax: 561.684.6360
Certificate of Authorization 514

SURFSIDE SEAWALL DESIGN

TOWN OF SURFSIDE, FLORIDA

PLAN AND ELEVATION DETAILS

DAVID W. FRODSHAM, P.E.
STATE OF FLORIDA PROFESSIONAL ENGINEER
LICENSE No. 75507
DATE: 4/30/2014

SCALE SHOWN ON DWG
PROJECT No 12-6247
PURPOSE OF THIS SET FOR BIDDING PURPOSES ONLY

SHEET: 12
C10
14

File Name: P:\Projects\2012\125247 Surfside Seawall Design\CADD Files\Drawings\125247-12-C10-DTLS-ELEV-VIEW.dwg - (Plotted by: Curt Alexander on Thursday, May 01, 2014 10:47:19 AM)

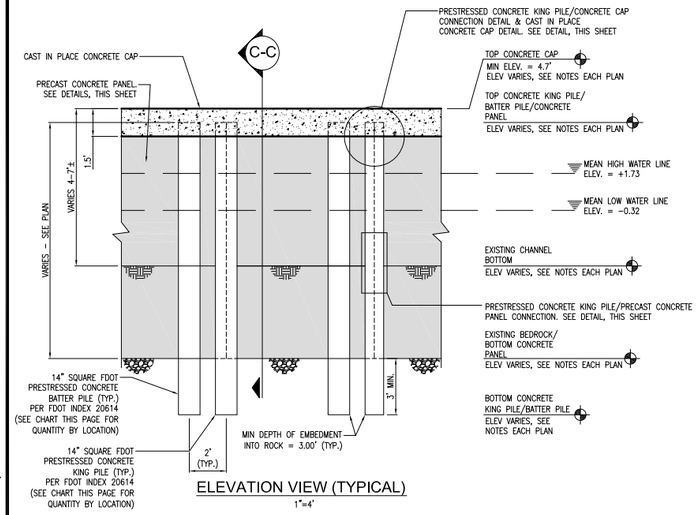

ELEVATION VIEW (TYPICAL)
1"=4'

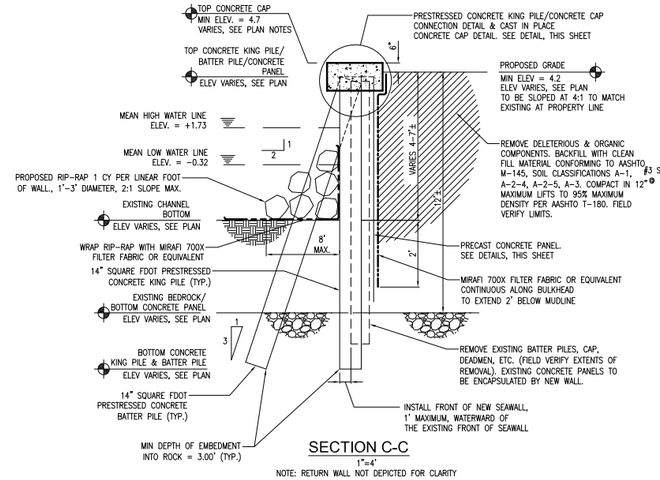

SECTION C-C
1"=4'
NOTE: RETURN WALL NOT DEPICTED FOR CLARITY

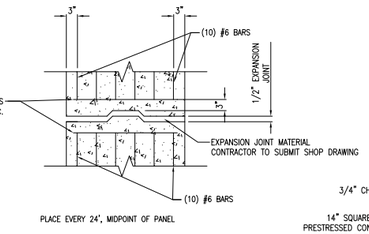

EXPANSION JOINT
N.T.S.

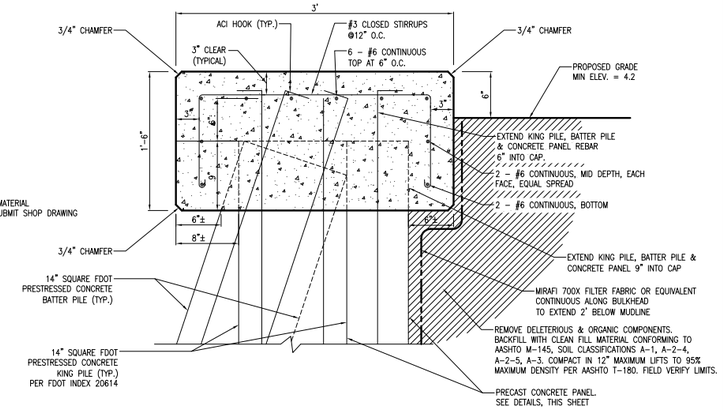

PRESTRESSED CONCRETE KING PILE / CAST IN PLACE CONCRETE CAP CONNECTION DETAIL & CAST IN PLACE CONCRETE CAP DETAIL
N.T.S.

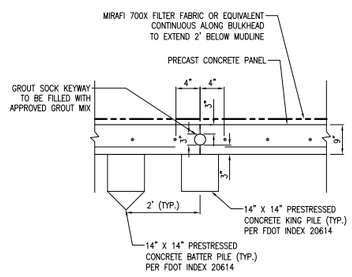

PRECAST CONCRETE PANEL JOINT DETAIL (PLAN VIEW)
N.T.S.

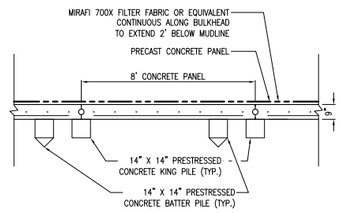

KING AND BATTER PILE CONFIGURATION DETAIL (PLAN VIEW)
N.T.S.

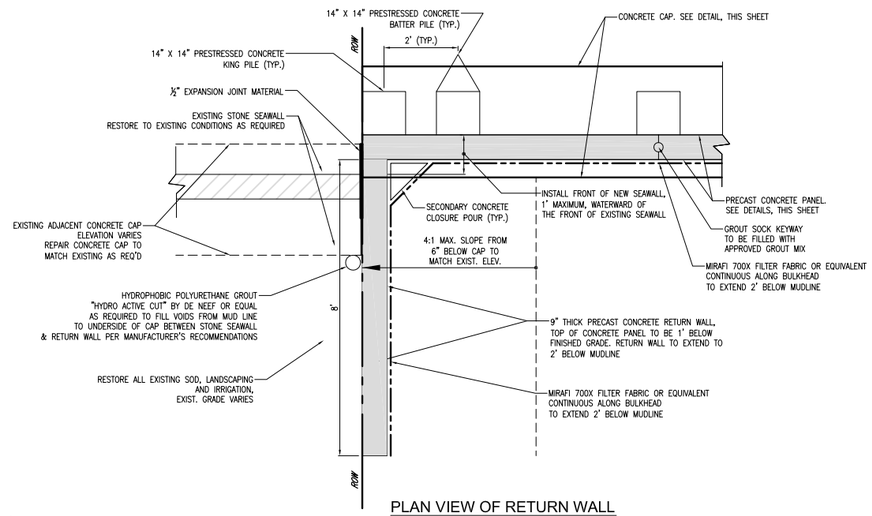

PLAN VIEW OF RETURN WALL
1"=2'

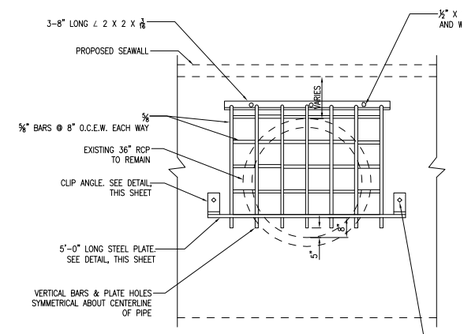

MANATEE GRATE DETAIL
N.T.S.

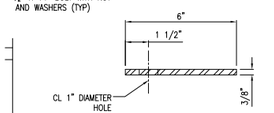

STEEL PLATE DETAIL
1"=4'

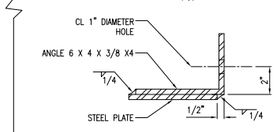

CLIP ANGLE DETAIL
N.T.S.

MANATEE GRATE NOTES:

1. THE MANATEE GRATE SHOWN ABOVE IS A REPRESENTATIVE EXAMPLE OF AN ACCEPTABLE MANATEE GRATE. THE GRATE IS TO BE MODIFIED PER LOCATION TO MATCH FIELD CONDITIONS.
2. CONTRACTOR IS TO MEASURE AND MODIFY GRATE TO MATCH FIELD CONDITIONS WHILE ABIDING BY THE FOLLOWING TO THE EXTENT PRACTICAL:
   - 2.1. SIZE REQUIREMENTS - ALL CULVERTS 8 INCHES TO 8 FEET IN DIAMETER MUST BE GRATED.
   - 2.2. MATERIAL - GRATES AND APPERTAINING HARDWARE TO BE MARINE GRADE QUALITY STEEL.
   - 2.3. GRATE BARS MUST BE MINIMUM ⅝" DIA. SPACED A MAXIMUM OF 8 INCHES APART TO EFFECTIVELY PREVENT MANATEE ACCESS.
   - 2.4. DIAGONAL, HORIZONTAL, OR VERTICAL GRATES MAY BE INSTALLED.
   - 2.5. GRATES MUST BE A PERMANENT FIXTURE AND NOT PART OF A WATER CONTROL STRUCTURE OR CULVERT.

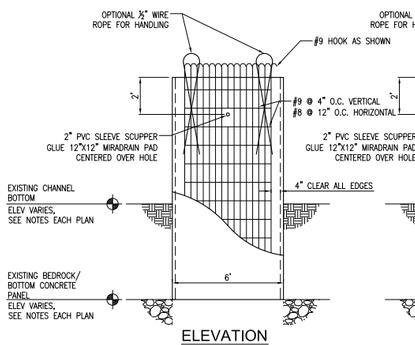

ELEVATION
6' PANEL

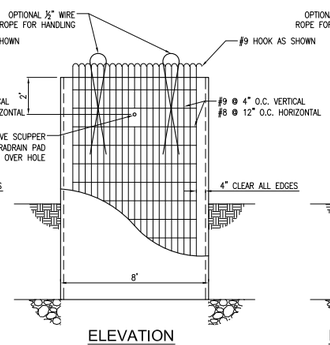

ELEVATION
8' PANEL

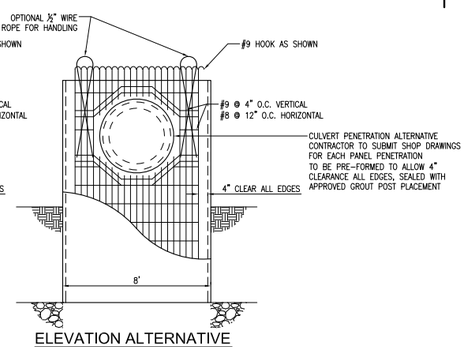

ELEVATION ALTERNATIVE
8' PANEL
WITH CULVERT PENETRATION

PRECAST CONCRETE PANEL DETAILS
1"=4'

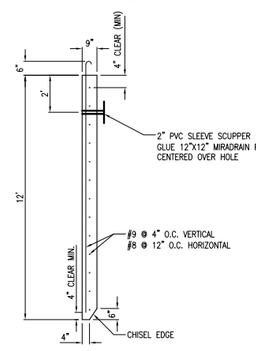

SECTION

LOCATION	SEAWALL LENGTH (FT)	CAP LENGTH (FT)	NO. OF KING PILES	NO. OF BATTER PILES	NO. OF PROPOSED OUTFALLS GREATER THAN 7" DIA.
FROUDE AVE.	50	50	7	7	0
BISCAYA DR.	50	50	7	7	2
BAY DR.	50	50	7	7	0
90TH ST.	64.7	64.7	9	9	0
92ND ST.	61.6	61.6	9	9	2 (2 REMOVED)
93RD ST.	57.9	57.9	8	8	0
94TH ST.	50	50	7	7	2
95TH ST.	50	50	7	7	1
SURFSIDE PARK	246.8	246.8	32	32	2
TOTAL:	681	681	93	93	9

811 KNOW WHAT'S BELOW ALWAYS CALL 811 BEFORE YOU DIG. It's fast, it's free, it's the law. www.callsunshine.com

FOR BIDDING PURPOSES ONLY

NO	DATE	REVISION	BY	NO	DATE	REVISION	BY

DESIGNED D.F. DATE 02-09-2013
CHECKED D.F. DATE 02-09-2013
ISSUED FOR BIDDING DATE 04-30-2014

Calvin, Giordano & Associates, Inc.
EXCEPTIONAL SOLUTIONS™
560 Village Boulevard •Suite 340 •West Palm Beach, FL 33409
Phone: 561.684.6161 • Fax: 561.684.6360
Certificate of Authorization 514

SURFSIDE SEAWALL DESIGN

TOWN OF SURFSIDE, FLORIDA

CROSS SECTIONS AND DETAILS

DAVID W. FRODSHAM, P.E.
STATE OF FLORIDA PROFESSIONAL ENGINEER
LICENSE No. 75507
DATE: 4/30/2014

SCALE SHOWN ON DWG
PROJECT No 12-6247
PURPOSE OF THIS SET FOR BIDDING PURPOSES ONLY

SHEET: 13
C11
14

File Name: P:\Projects\2012\125247 Surfside Seawall Design\CADD Files\Drawings\125247-13-14-C11-C12-DTLS-SCTNS.dwg – (Plotted by: Curt Alexander on Thursday, May 01, 2014 10:49:26 AM)

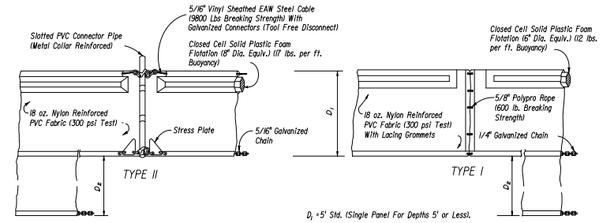

NOTICE: COMPONENTS OF TYPES I AND II MAY BE SIMILAR OR IDENTICAL TO PROPRIETARY DESIGNS. ANY INFRINGEMENT ON THE PROPRIETARY RIGHTS OF THE DESIGNER SHALL BE THE SOLE RESPONSIBILITY OF THE USER. SUBSTITUTIONS FOR TYPES I AND II SHALL BE AS APPROVED BY THE ENGINEER.

D_1 = 5' Std. (Single Panel For Depths 5' or Less).
D_2 = 5' Std. (Additional Panel For Depths 5'+. Curtain To Reach Bottom Up To Depths Of 10 Feet. Two(2) Panels To Be Used For Depths Greater Than 10 Feet Unless Special Depth Curtains Specifically Called For In The Plans Or As Determined By The Engineer.

FLOATING TURBIDITY BARRIERS

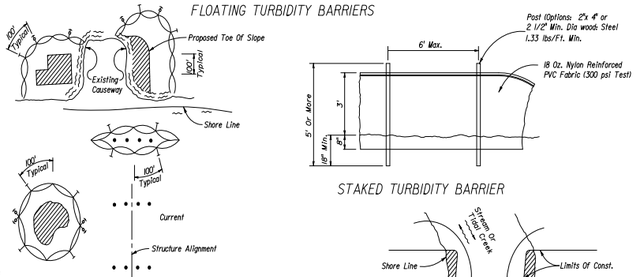

STAKED TURBIDITY BARRIER

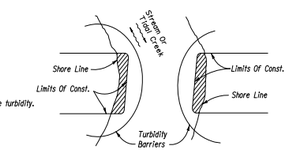

NOTES:

1. Turbidity barriers are to be used in all permanent bodies of water regardless of water depth.
2. Turbidity barriers shall be of sufficient length & depth & sufficiently stabilized in order to minimize turbidity.
3. Number and spacing of anchors dependent on current velocities.
4. Deployment of barrier around pile locations may vary to accommodate construction operations.
5. Navigation may require segmenting barrier during construction operations.
6. For additional information see Section 104 of the Standard Specifications.

TURBIDITY BARRIER APPLICATIONS

GENERAL NOTES

1. Floating turbidity barriers are to be paid for under the contract unit price for Floating Turbidity Barrier, LF.
2. Staked turbidity barriers are to be paid for under the contract unit price for Staked Turbidity Barrier, LF.

WATER QUALITY

1. Prior to construction and during all operations that may degrade water quality, the Contractor shall practise turbidity controls to prevent violations fo the water quality standards as outlined in Chapter 62-302, F.A.C

LEGEND

- Pile Locations
- Dredge Or Fill Area
- Mooring Buoy w/Anchor
- Anchor
- Barrier Movement Due To Current Action

Note:
Turbidity barriers for flowing streams and tidal creeks may be either floating, or staked types or any combinations of types that will suit site conditions and meet erosion control and water quality requirements. The barrier type(s) will be at the Contractors option unless otherwise specified in the plans, however payment will be under the pay item(s) established in the plans for Floating Turbidity Barrier and/or Staked Turbidity Barrier. Posts in staked turbidity barriers to be installed in vertical position unless otherwise directed by the Engineer.

TURBIDITY BARRIERS

N.T.S.

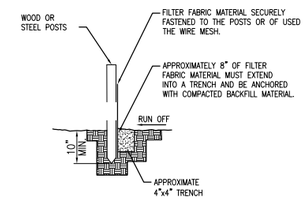

SECTION

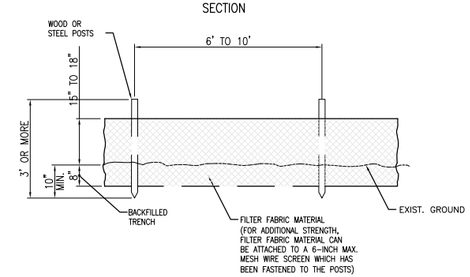

ELEVATION

SILT BARRIER FENCE

N.T.S.

KNOW WHAT'S BELOW ALWAYS CALL 811 BEFORE YOU DIG
It's fast, It's free, It's the law.
www.callsunshine.com

FOR BIDDING PURPOSES ONLY

NO	DATE	REVISION	BY	NO	DATE	REVISION	BY

DESIGNED D.F. DATE 02-09-2013
CHECKED D.F. DATE 02-09-2013
ISSUED FOR BIDDING DATE 04-30-2014

Calvin, Giordano & Associates, Inc.
EXCEPTIONAL SOLUTIONS™
560 Village Boulevard •Suite 340 •West Palm Beach, FL 33409
Phone: 561.684.6161 • Fax: 561.684.6360
Certificate of Authorization 514

SURFSIDE SEAWALL DESIGN

TOWN OF SURFSIDE, FLORIDA

STORM WATER POLLUTION PREVENTION DETAILS

DAVID W. FRODSHAM, P.E.
STATE OF FLORIDA PROFESSIONAL ENGINEER
LICENSE No. 75507
DATE: 4/30/2014

SCALE SHOWN ON DWG
PROJECT No 12-6247
PURPOSE OF THIS SET FOR BIDDING PURPOSES ONLY

SHEET: 14
C12
14

File Name: P:\Projects\2012\125247 Surfside Seawall Design\CADD Files\Drawings\125247-13-14-C11-C12-DTLS-SCTNS.dwg – (Plotted by: Curt Alexander on Thursday, May 01, 2014 10:50:25 AM)