ARCHITECTURE AND INTERIORS ABBREVIATIONS

AB	ANCHOR BOLT
AC, A/C	AIR CONDITIONING
ACOUS	ACOUSTICAL
ACP	ACOUSTICAL CEILING PANEL
AD	AREA DRAIN
ADDL	ADDITIONAL
ADDM	ADDENDUM
ADJ	ADJUSTABLE
A/E	ARCHITECT/ENGINEER
AFF	ABOVE FINISH FLOOR
AGGR	AGGREGATE
AHU	AIR HANDLING UNIT
AL, ALUM	ALUMINUM
ALT	ALTERNATE
ANOD	ANODIZED
AP	ACCESS PANEL
APPROX	APPROXIMATE
APT	APARTMENT
ARCH	ARCHITECT(URAL)
ASPH	ASPHALT
AUTO	AUTOMATIC
AV	AUDIO/VISUAL
AVG	AVERAGE
B	BASE
BB	BULLETIN BOARD
BD	BOARD
BETW	BETWEEN
BITUM	BITUMINOUS
BLDG	BUILDING
BM	BEAM
BOT	BOTTOM
BR	BEDROOM
BSMT	BASEMENT
BU	BUILT-UP
BUR	BUILT-UP ROOF
C, CTR	CENTER
C/C	CENTER TO CENTER
CAB	CABINET
CAR	CARPET
CB	CATCH BASIN
CD	CONSTRUCTION DOCUMENT
CEM	CEMENT
CEM PLAS	CEMENT PLASTER
CER	CERAMIC
CER TILE	CERAMIC TILE
CH BD	CHALKBOARD
CIP	CAST-IN-PLACE
CJ	CONTROL JOINT
CL	CENTER LINE
CLF	CHAIN LINK FENCE
CLG	CEILING
CLL	CONTRACT LIMIT LINE
CLO	CLOSET
CLR	CLEAR, CLEARANCE
CMU	CONCRETE MASONRY UNIT
COL	COLUMN
CONC	CONCRETE
CONF	CONFERENCE
CONST	CONSTRUCTION
CONT	CONTINUOUS
CORR	CORRIDOR
CSK	COUNTERSUNK
CU	CONDENSER UNIT
DBL	DOUBLE
DD	DESIGN DEVELOPMENT
DEMO	DEMOLISH, DEMOLITION
DET	DETAIL, DETECTOR
DEPT	DEPARTMENT
DF	DRINKING FOUNTAIN
DIA	DIAMETER
DIAG	DIAGONAL
DIM	DIMENSION
DN	DOWN
DO	DITTO
DR	DINING ROOM, DOOR
DS	DOWNSPOUT
DW	DISHWASHER
DWG	DRAWING
E	EAST
EA	EACH
EHPA	ENHANCED HURRICANE PROTECTION AREA
EIFS	EXTERIOR INSULATED FINISH SYSTEM
EL	ELEVATION
ELEC	ELECTRIC(AL)
ELEV	ELEVATOR
EMER	EMERGENCY
ENGR	ENGINEER
EOS	EMERGENCY OVERFLOW SCUPPER
EPDM	ETHYLENE PROPYLENE DIENE MONOMER
EQ	EQUAL
EQUIP	EQUIPMENT
ESCAL	ESCALATOR
ESMT	EASEMENT
EW	EACH WAY
EWC	ELECTRIC WATER COOLER
EXH	EXHAUST
EXP	EXPANSION
EXP BT	EXPANSION BOLT
EXP JT	EXPANSION JOINT
EXST	EXISTING
EXT	EXTERIOR
FACBC	FLORIDA ACCESSIBILITY CODE FOR BUILDING CONSTRUCTION
FACP	FIRE ALARM CONTROL PANEL
FD	FLOOR DRAIN
FDN	FOUNDATION
FDV	FIRE DEPARTMENT VALVE
FE	FIRE EXTINGUISHER
FEC	FIRE EXTINGUISHER CABINET
FGL	FIBERGLASS
FHC	FIRE HOSE CABINET
FIN	FINISH
FIN FL	FINISH FLOOR
FIN GR	FINISH GRADE
FLR	FLOOR(ING)
FLUOR	FLUORESCENT
FO	FINISH OPENING
FOC	FACE OF CONCRETE
FOM	FACE OF MASONRY
FOS	FACE OF STUDS
FS	FLOOR SINK
FT	FOOT, FEET
FTG	FOOTING
FURN	FURNITURE
FURR	FURRING
FUT	FUTURE

GA	GAGE, GAUGE
GALV	GALVANIZED
GB	GRAB BAR
GC	GENERAL CONTRACTOR
GEN	GENERATOR
GL	GLASS
GL BLK	GLASS BLOCK
GR	GRADE
GT	GROUT
GVL	GRAVEL
GYP	GYPSUM
GYP BD	GYPSUM BOARD
GYP PLAS	GYPSUM PLASTER
H	HIGH
HB	HOSE BIBB
HC	HANDICAPPED, HOLLOW CORE
HDWE	HARDWARE
HM	HOLLOW METAL
HNDRL	HANDRAIL
HORIZ	HORIZONTAL
HPT	HIGH POINT
HVAC	HEATING, VENTILATION & AIR CONDITIONING
HWH	HOT WATER HEATER
ID	INSIDE DIAMETER
IN	INCH(ES)
INSUL	INSULATE(D), INSULATION
INT	INTERIOR
JAN	JANITOR
JC	JANITOR'S CLOSET
JT	JOINT
KIT	KITCHEN
LAB	LABORATORY
LAM	LAMINATE(D)
LAV	LAVATORY
LB	POUND
LBL	LABEL
LF	LINEAR FEET
LKR	LOCKER
LKR RM	LOCKER ROOM
LONG	LONGITUDINAL
LPT	LOW POINT
LR	LIVING ROOM
LT WT	LIGHT WEIGHT
LVR	LOUVER
M	METER
MACH	MACHINE
MACH RM	MACHINE ROOM
MAINT	MAINTENANCE
MARB	MARBLE
MATL	MATERIAL
MAX	MAXIMUM
MC	MEDICINE CABINET
MECH	MECHANICAL
MECH RM	MECHANICAL ROOM
MET	METAL
MEZZ	MEZZANINE
MFR	MANUFACTURER
MIN	MINIMUM, MINUTE
MISC	MISCELLANEOUS
MO	MASONRY OPENING
MOD	MODULAR, MODULE
MR	MOISTURE RESISTANT
MTD	MOUNTED
MTL	METAL
MULL	MULLION
N	NORTH
NA, N/A	NOT APPLICABLE
NFPA	NATIONAL FIRE PROTECTION ASSOCIATION
NGVD	NATIONAL GEODETIC VERTICAL DATUM
NIC	NOT IN CONTRACT
NO	NUMBER
NOM	NOMINAL
NTS	NOT TO SCALE
OC	ON CENTER
OD	OUTSIDE DIAMETER
OFCI	OWNER FURNISHED - CONTRACTOR INSTALLED
OFF	OFFICE
OFOI	OWNER FURNISHED - OWNER INSTALLED
OPNG	OPENING
OPP	OPPOSITE
ORD	OVERFLOW ROOF DRAIN
OVHD	OVERHEAD
OZ	OUNCE
PB	PANIC BAR
PC	POINT OF CURVE
PCC	PRECAST CONCRETE, POINT OF COMPOUND CURVE
PER	PERPENDICULAR
PI	POINT OF INTERSECTION
PL	PLATE, PROPERTY LINE
PLAM	PLASTIC LAMINATE
PLAS	PLASTER
PLYWD	PLYWOOD
PNL	PANEL
PNT	PAINT
PRC	POINT OF REVERSE CURVE
PREFAB	PREFABRICATED
PT	POINT, PRESSURE TREATED, POINT OF TANGENCY
PTN	PARTITION
PVC	POLYVINYL CHLORIDE
QT	QUARRY TILE
QTY	QUANTITY
R	RADIUS, RISER, THERMAL RESISTANCE
RAD	RADIUS
RCP	REFLECTED CEILING PLAN
RD	ROAD, ROOF DRAIN
REF	REFERENCE
RFR	REFRIGERATOR
REINF	REINFORCED, REINFORCEMENT
REQD	REQUIRED
RESIL	RESILIENT
REV	REVERSED, REVISED, REVISION
RM	ROOM
RO	ROUGH OPENING
ROW	RIGHT OF WAY
RWL	RAIN WATER LEADER

S	SOUTH
SAN	SANITARY
SB	SPLASH BLOCK
SBC	STANDARD BUILDING CODE
SCHED	SCHEDULE(D)
SD	SOAP DISPENSER
SDWK	SIDEWALK
SECT	SECTION
SF	SQUARE FEET
SH	SHELF
SHT	SHEET
SHTHG	SHEATHING
SIM	SIMILAR
SPECS	SPECIFICATIONS
SPKR	SPEAKER
SQ	SQUARE
SS, SST	STAINLESS STEEL
ST	STREET
STA	STATION
STD	STANDARD
STL	STEEL
STOR	STORAGE
STRUCT	STRUCTURAL
SUSP	SUSPENDED
SUSP CLG	SUSPENDED CEILING
SYM	SYMBOL, SYMMETRICAL
T	TREAD
T&B	TOP AND BOTTOM
T&G	TONGUE AND GROOVE
TB	TIE BEAM
TC	TIE COLUMN
TEL	TELEPHONE
TEMP	TEMPORARY
THK	THICK(NESS)
TMPD	TEMPERED
TMPD GL	TEMPERED GLASS
TOB	TOP OF BEAM
TOC	TOP OF CONCRETE
TOF	TOP OF FOOTING
TOIL	TOILET
TOP	TOP OF PARAPET
TOS	TOP OF SLAB
TOW	TOP OF WALL
TV	TELEVISION
TWS	TACKABLE WALL SURFACE
TYP	TYPICAL
TZ	TERRAZZO
UC	UNDERCOUNTER, UNDERCUT
UL	UNDERWRITERS LABORATORIES
UNF	UNFINISHED
UON	UNLESS OTHERWISE NOTED
VCT	VINYL COMPOSITION TILE
VERT	VERTICAL
VEST	VESTIBULE
VIF	VERIFY IN FIELD
VIN	VINYL
VOL	VOLUME
VWC	VINYL WALL COVERING
VWP	VINYL WALL PANELING
W	WEST, WIDE, WIDTH
W/	WITH
WC	WATER CLOSET
WD	WOOD
W/O	WITHOUT
WP	WORKING POINT
WT	WEIGHT
WWF	WELDED WIRE FABRIC
WTRPF	WATERPROOFING
XFMR	TRANSFORMER
YD	YARD
@	AT
∠	ANGLE
℄	BASE LINE
℄	CENTER LINE
[	CHANNEL
ø	DIAMETER, ROUND
#	POUND, NUMBER
⅊	PROPERTY LINE

DIMENSIONING SYSTEM

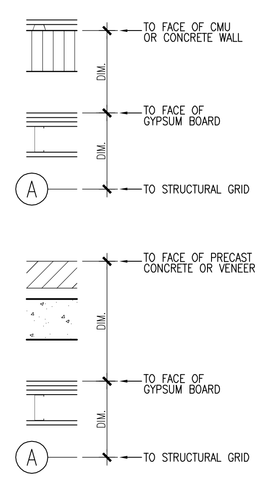

GENERAL SYMBOLS

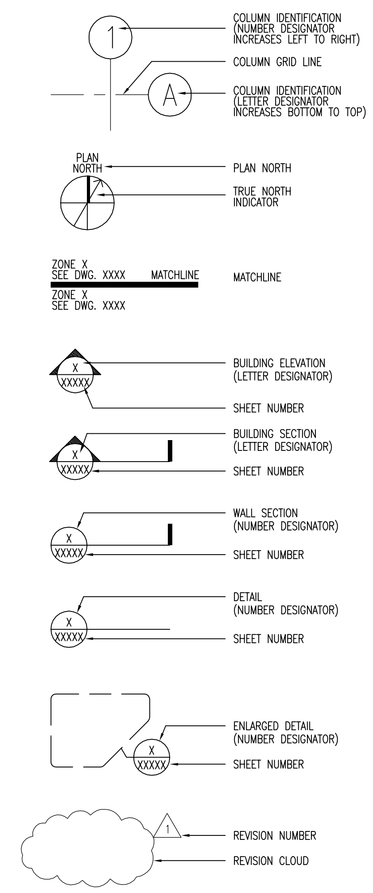

ARCHITECTURAL AND INTERIOR SYMBOLS

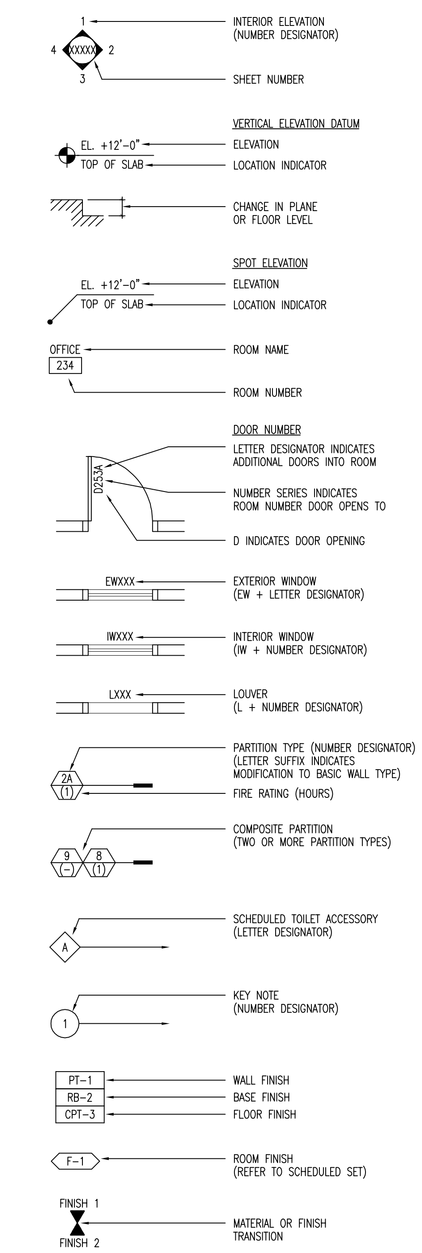

LEGEND OF MATERIALS

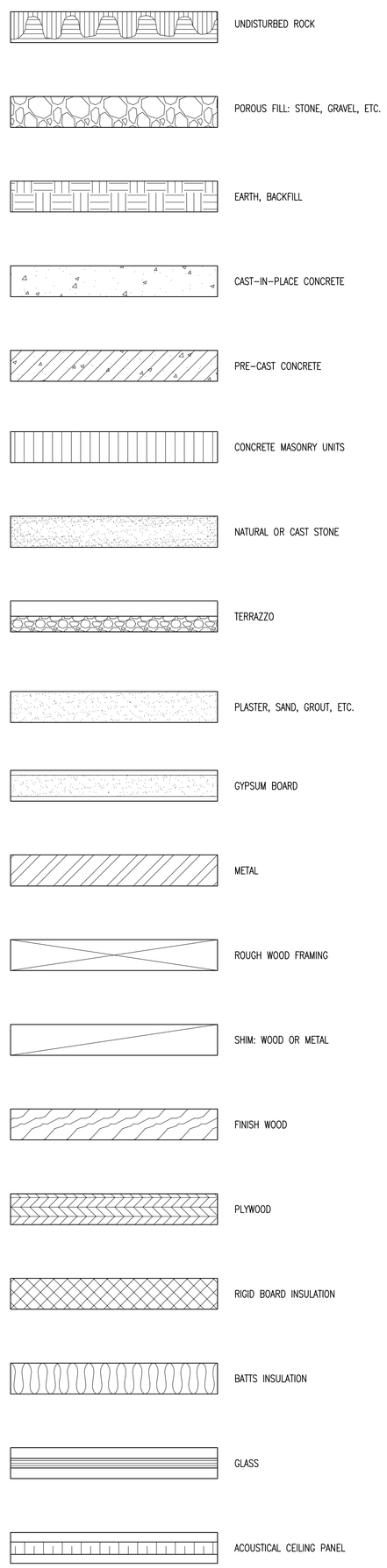

NOTE:
NOT ALL SYMBOLS AND ABBREVIATIONS LISTED APPLY TO THIS PROJECT. REFER TO CONSTRUCTION DOCUMENTS FOR SCOPE OF WORK.

CLIENT

TOWN OF SURFSIDE COMMUNITY CENTER
9301 Collins Avenue, Surfside, Florida 33154

DESIGNER

SPILLIS CANDELA DMJM
800 DOUGLAS ENTRANCE, SUITE 200
CORAL GABLES, FL 33134
T: 305-444-4691 F: 305-447--3580
www.spillriscandeladmjm.com
FLORIDA LICENSE AA0003298

CONSULTANTS

LANDSCAPE ARCHITECTURE
SAVINO & MILLER DESIGN STUDIO
12345 NE 6TH AVENUE, MIAMI, FLORIDA 33161
Tel.: (305) 892-9082 Fax: (305) 895-9083

ESTIMATING CONSULTANT
CMS CONSTRUCTION MANAGEMENT SERVICES
10 FAIRWAY DRIVE SUITE 301 DEERFIELD BEACH, FL 33441
Tel.: (954) 481-1611 Fax: (954) 427-3142

COASTAL CONTRUCTION
EDC CORPORATION
2455 SW 27TH AVENUE , MIAMI, FLORIDA 33145
Tel.: (305) 858-8100 Fax: (305) 858-4760

FOOD SERVICES CONSULTANT
SYSTEMS DESIGN INTERNATIONAL
110 EAST BROWARD BOULEVARD FT. LAUDERDALE, FL 33301
Tel.: (954) 315-3855 Fax: (954) 208-9018

POOL CONSULTANT
AQUADYNAMICS, INC.
5000 SW 75TH AVE. SUITE 203, MIAMI, FLORIDA 33155
Tel.: (305) 667-8975 Fax: (305) 662-1002

LEED CONSULTANT
SPINNAKER GROUP, INC.
501 SPINNAKER, WESTON, FL. 33326
Tel.: (954) 347-0967 Fax: (954) 217-3614

REGISTRATION

PROFESSIONAL OF RECORD: JESUS CRUZ
DISCIPLINE: ARCHITECTURE
REGISTRATION NO. AR0006906

ISSUE

MARK	DATE	DESCRIPTION

PROJECT NO:	60028604
DRAWN BY:	
CHECKED BY:	
DATE:	10-22-2009

KEY PLAN

SHEET TITLE

ARCHITECTURAL LEGENDS, SYMBOLS AND ABBREVIATIONS

A0.2.01

© 2003 DMJMH+N, Inc. Rev. 2003-1