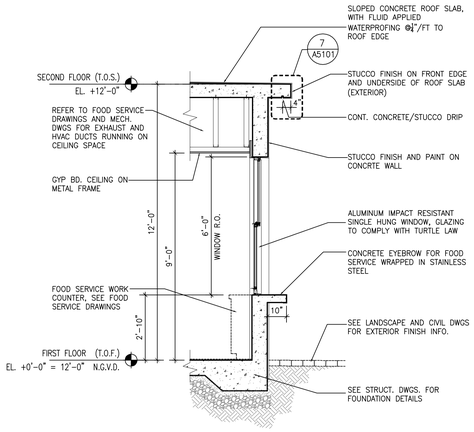

5 WALL SECTION

REF. SCC-AWS01 SCALE: 3/8"= 1'-0"

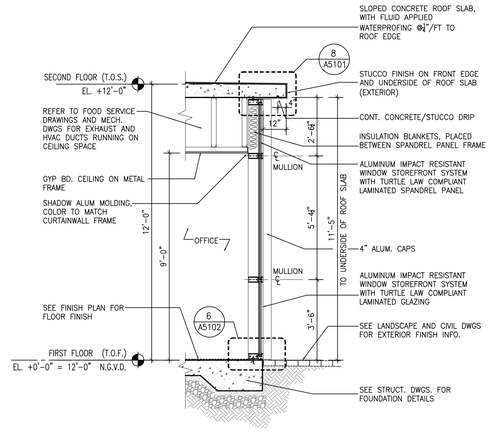

4 WALL SECTION

REF. SCC-AWS01 SCALE: 3/8"= 1'-0"

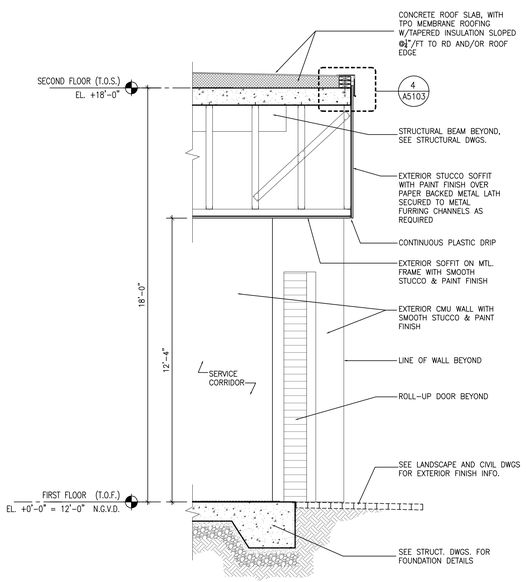

3 WALL SECTION

REF. SCC-AWS01 SCALE: 3/8"= 1'-0"

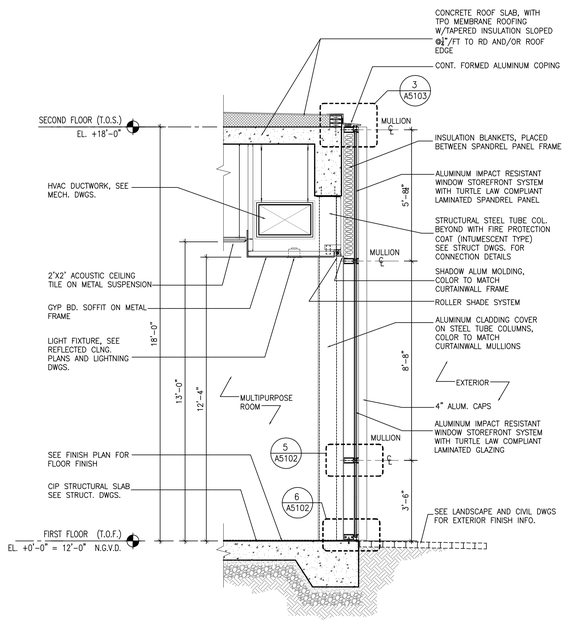

2 WALL SECTION

REF. SCC-AWS01 SCALE: 3/8"= 1'-0"

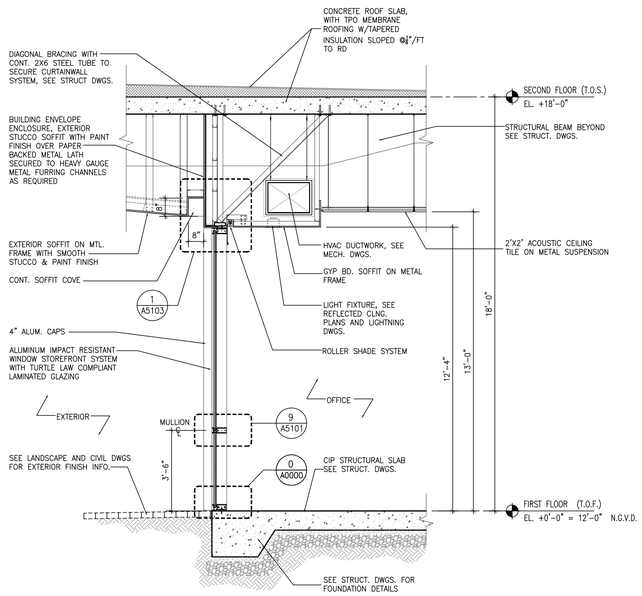

1 WALL SECTION

REF. SCC-AWS01 SCALE: 3/8"= 1'-0"

CLIENT

TOWN OF SURFSIDE COMMUNITY CENTER

9301 Collins Avenue, Surfside, Florida 33154

DESIGNER

SPILLIS CANDELA DMJM

800 DOUGLAS ENTRANCE, SUITE 200
CORAL GABLES, FL 33134
T: 305-444-4691 F: 305-447--3580
www.spilliscandeladmjm.com

FLORIDA LICENSE AA0003298

CONSULTANTS

LANDSCAPE ARCHITECTURE
SAVINO & MILLER DESIGN STUDIO
12345 NE 6TH AVENUE, MIAMI, FLORIDA 33161
Tel.: (305) 892-9082 Fax: (305) 895-9083

ESTIMATING CONSULTANT
CMS CONSTRUCTION MANAGEMENT SERVICES
10 FAIRWAY DRIVE SUITE 301 DEERFIELD BEACH, FL 33441
Tel.: (954) 481-1611 Fax: (954) 427-3142

COASTAL CONTRUCTION
EDC CORPORATION
2455 SW 27TH AVENUE , MIAMI, FLORIDA 33145
Tel.: (305) 858-8100 Fax: (305) 858-4760

FOOD SERVICES CONSULTANT
SYSTEMS DESIGN INTERNATIONAL
110 EAST BROWARD BOULEVARD FT. LAUDERDALE, FL 33301
Tel.: (954) 315-3855 Fax: (954) 208-9018

POOL CONSULTANT
AQUADYNAMICS, INC.
5000 SW 75TH AVE. SUITE 203, MIAMI, FLORIDA 33155
Tel.: (305) 667-8975 Fax: (305) 662-1002

LEED CONSULTANT
SPINNAKER GROUP, INC.
501 SPINNAKER, WESTON, FL. 33326
Tel.: (954) 347-0967 Fax: (954) 217-3614

REGISTRATION

PROFESSIONAL OF RECORD: JESUS CRUZ
DISCIPLINE: ARCHITECTURE
REGISTRATION NO. AR0006906

ISSUE

MARK	DATE	DESCRIPTION

PROJECT NO:	60028604
DRAWN BY:	
CHECKED BY:	
DATE:	10-22-2009

KEY PLAN

SHEET TITLE

WALL SECTIONS

A4.4.01

© 2003 DMJMH+N, Inc. Rev. 2003-1