RELAY PANEL SYSTEM NOTES:

1) 24 HOUR TECHNICAL SUPPORT IS AVAILABLE AT 800-523-9466
2) PANEL HAS BUILT-IN PROCESSOR AND ASTRONOMIC TIME CLOCK. UP TO 500 EVENTS CAN BE PROGRAMMED WITHIN A CALENDAR YEAR ON A WEEKLY SCHEDULE AND FOR UP TO 40 HOLIDAYS.
3) SYSTEM IS PROGRAMMED FROM LCD SCREEN LOCATED DIRECTLY ON PANEL. CONTROLS CAN BE PROGRAMMED FOR AREA CONTROL, MANUAL OVERRIDE, DELAY TO OFF, RECALL LIGHT PATTERNS, OR TIME CLOCK ENABLE/DISABLE. TO BE DETERMINED IN THE FIELD.
4) PANEL PROCESSOR SHALL BE PASSWORD PROTECTABLE FOR SECURITY.
5) ALL INPUT FEED, LOAD, AND CONTROL TERMINALS SHALL BE FRINT ACCESSIBLE WITHOUT THE NEED TO REMOVE RELAY ASSEMBLIES OR OTHER COMPONENTS.
6) THE CONTROL SYSTEM SHALL HAVE A FULL INTERNAL BATTERY BACKUP THAT CAN STORE ALL SYSTEM MEMORY FOR ONE YEAR WITHOUT POWER.
7) PANEL SHALL BE WALL MOUNTED ONLY.
8) PANEL AND OTHER SYSTEM COMPONENTS INCLUDING CONTROL STATION AND WIRING SHALL BE U.L. APPROVED AND SHALL ALSO BE APPROVED BY ALL LOCAL AUTHORITIES HAVING JURISDICTION.
9) PANEL AND CONTROLS SHALL BE MANUFACTURED BY LUTRON.
10) PANEL SHALL BE FACTORY PRE-ASSEMBLED AND 100% TESTED PRIOR TO SHIPMENT.
11) MANUFACTURER SHALL PROVIDE TOLL-FREE TECHNICAL SUPPORT HOTLINE 24 HOURS PER DAY, 7 DAYS PER WEEK.
12) WIRING FROM THE PROCESSOR TO CONTROL WALLSTATIONS AND CONTROL INTERFACES SHALL BE LOW VOLTAGE TYPE CLASS 2 WIRING (PELV).
13) PANEL HAS TWO CONTACT CLOSURE INPUTS FOR BMS INTEGRATION, OCCUPENCY SENSOR, OR PHOTO SENSOR INPUTS.

DEVICE SPECIFICATIONS - OCCUPANT SENSORS:

OS5 - CDT5 - LUTRON P/N LOS-CDT-500-WH
(DUAL TECHNOLOGY, SELF-ADAPTIVE CEILING MOUNT OCCUPANCY SENSOR)
USE WHERE INDICATED ON PLANS. COVERAGE AREA OF 500 SQF WITH A 180 DEGREE FIELD OF VIEW. IDEAL MOUNTING HEIGHT OF 12 FEET OR LESS FOR SPECIFIED COVERAGE AREA. LOCATE AWAY FROM HIGH-HEAT ENVIRONMENTS, DIRECT AIR-FLOW, AND PLASMA SCREENS. FOR BEST RESULTS, POSITION SENSOR ON SAME SIDE AS DOOR AWAY FROM AIR VENTS. SET TIME-OFF SETTING FOR 10 MINUTES FOLLOWING EXIT FROM ROOM.

OS1 - CDT1 - LUTRON P/N LOS-CDT-1000-WH
SAME AS CDT5 ONLY WITH A 1000SQF COVERAGE AREA AT 180 DEGREE FIELD OF VIEW.

OS2 - CDT2 - LUTRON P/N LOS-CDT-2000-WH
SAME AS CDT5 ONLY WITH A 2000SQF COVERAGE AREA AT 360 DEGREE FIELD OF VIEW.
IDEAL FOR OPEN OFFICE AREAS AND LARGER SPACES.

PP-277H - POWER PACK - LUTRON P/N PP-120H OR PP-277H
(20A rated relay with 24V output to Occupancy Sensors)
Operate up to 3 sensors per Power Pack.
7 wire leads. 16 AWG wires.
Can be used in a plenum air space.
Fits inside 4"x4" Junction Box.

$_{IR} - LUTRON P/N LOS-SIR-WH (INFRARED ONLY, SELF-ADAPTIVE
5A WALL SWITCH OCCUPANCY SENSOR). USE WHERE INDICATED ON PLANS.
APPLICATIONS INCLUDE ENCLOSED AREAS UNDER 900 SQF IN A SINGLE POLE APPLICATION WHERE CONSTANT MOTION OR QUICK ENTRY/EXIT WILL BE PERFORMED, TYPICALLY IN MECHANICAL AND ELECTRICAL ROOMS, CLOSETS, STORAGE ROOMS. LOCATE AWAY FROM HIGH-HEAT ENVIRONMENTS AND PLASMA SCREENS. FOR BEST RESULTS, POSITION SENSOR TO FACE THE COVERAGE AREA. SET TIME-OFF SETTING FOR 10 MINUTES FOLLOWING EXIT FROM ROOM.

DEVICE SPECIFICATIONS - SENTRY SWITCHES, TIMER SWITCHES:

$_T - AUTOMATIC TIMER SWITCH
COOPER CONTROLS GREENGATE MODEL NO. TSW-MV-W
120/277V RATED TIMER SWITCH WITH BLINK-WARN AND AUDIBLE NOISE NOTIFIER FOR ENERGY CODE COMPLIANCE.
RATED 0-800W AT 120V; 0-1200W AT 277V.
CONTRACTOR TO SET TIMER SO THAT TIME-OFF IS SET TO 4 HOURS WITH BLINK-WARN AND AUDIBLE NOISE WARN IS ENABLED.
CONTRACTOR TO DISABLE TIMER OVERRIDE FUNCTIONS.
THIS IS A STANDALONE DEVICE AND IS NOT PART OF A SYSTEM.
CONTRACTOR TO SET TIMER TO 3 HOURS WITH BEEP AND FLASH FUNCTIONS.

$_5 - SENTRY SWITCH - MODEL NO. SD05277WHD
120/277V RATED SWITCH WITH BUILT-IN RELAY FOR ENERGY CODE COMPLIANCE. USE WITH LIGHTING LOADS BETWEEN 0 AND 5A ONLY. NIGHT-LIGHT ALLOWS USER TO FIND SWITCH AFTER LIGHTS SHUT OFF.

$_2 - SENTRY SWITCH - MODEL NO. SD202277WHD
120/277V RATED SWITCH WITH BUILT-IN RELAY FOR ENERGY CODE COMPLIANCE. USE WITH LIGHTING LOADS BETWEEN 1 AND 16A ONLY. NIGHT-LIGHT ALLOWS USER TO FIND SWITCH AFTER LIGHTS SHUT OFF.

$_{53} - SENTRY SWITCH - MODEL NO. SD053277WHD
3-WAY VERSION OF $5

$_{23} - SENTRY SWITCH - MODEL NO. SD023277WHD
3-WAY VERSION OF $2

DEVICE SPECIFICATIONS - ECOSYSTEM / QUANTUM / SHADES:

OS - Lutron Ceiling Mounted Occupancy Sensor
Use appropriate sensor per plans (500/1000/2000 square feet)
Dual Technology, Self-Adaptive - Type LOS-CDT-500/1000/2000-WH

OCCUPANCY SENSORS & TIMER SWITCHES TYPICAL WIRING

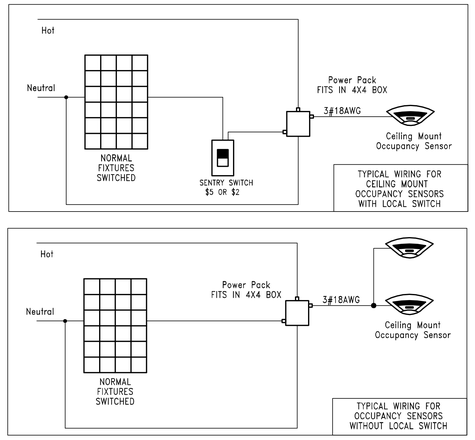

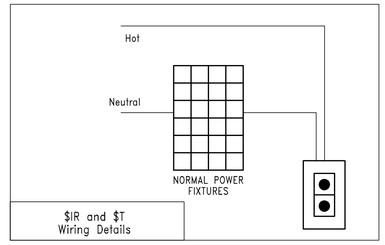

(B)

RELAY CONTROL SYSTEM - PUBLIC SPACES & SITE LIGHTING

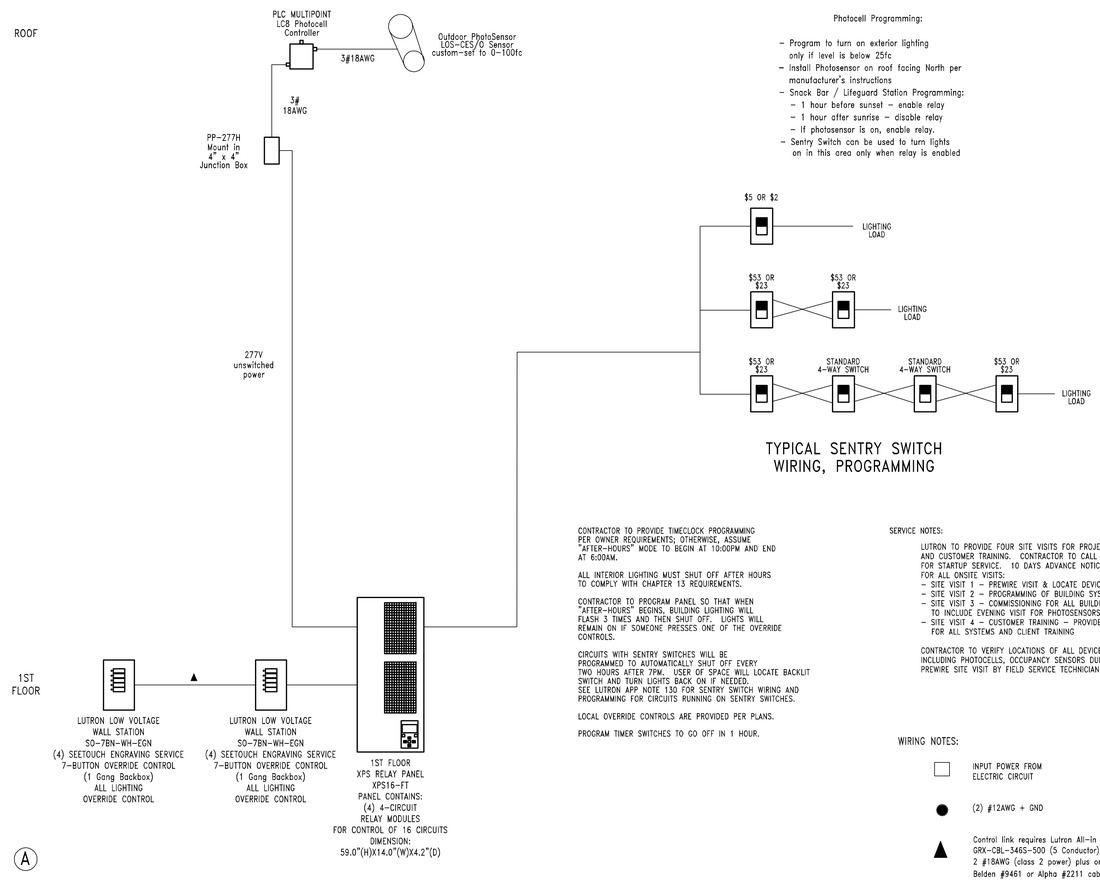

Photocell Programming:

- Program to turn on exterior lighting only if level is below 25fc
- Install Photosensor on roof facing North per manufacturer's instructions
- Snack Bar / Lifeguard Station Programming:
  - 1 hour before sunset - enable relay
  - 1 hour after sunrise - disable relay
  - If photosensor is on, enable relay.
- Sentry Switch can be used to turn lights on in this area only when relay is enabled

TYPICAL SENTRY SWITCH WIRING, PROGRAMMING

CONTRACTOR TO PROVIDE TIMECLOCK PROGRAMMING PER OWNER REQUIREMENTS; OTHERWISE, ASSUME "AFTER-HOURS" MODE TO BEGIN AT 10:00PM AND END AT 6:00AM.

ALL INTERIOR LIGHTING MUST SHUT OFF AFTER HOURS TO COMPLY WITH CHAPTER 13 REQUIREMENTS.

CONTRACTOR TO PROGRAM PANEL SO THAT WHEN "AFTER-HOURS" BEGINS, BUILDING LIGHTING WILL FLASH 3 TIMES AND THEN SHUT OFF. LIGHTS WILL REMAIN ON IF SOMEONE PRESSES ONE OF THE OVERRIDE CONTROLS.

CIRCUITS WITH SENTRY SWITCHES WILL BE PROGRAMMED TO AUTOMATICALLY SHUT OFF EVERY TWO HOURS AFTER 7PM. USER OF SPACE WILL LOCATE BACKLIT SWITCH AND TURN LIGHTS BACK ON IF NEEDED. SEE LUTRON APP NOTE 130 FOR SENTRY SWITCH WIRING AND PROGRAMMING FOR CIRCUITS RUNNING ON SENTRY SWITCHES.

LOCAL OVERRIDE CONTROLS ARE PROVIDED PER PLANS.

PROGRAM TIMER SWITCHES TO GO OFF IN 1 HOUR.

SERVICE NOTES:

LUTRON TO PROVIDE FOUR SITE VISITS FOR PROJECT COMMISSIONING AND CUSTOMER TRAINING. CONTRACTOR TO CALL 800-523-9466 FOR STARTUP SERVICE. 10 DAYS ADVANCE NOTICE REQUIRED FOR ALL ONSITE VISITS:
- SITE VISIT 1 - PREWIRE VISIT & LOCATE DEVICES
- SITE VISIT 2 - PROGRAMMING OF BUILDING SYSTEMS
- SITE VISIT 3 - COMMISSIONING FOR ALL BUILDING SYSTEMS TO INCLUDE EVENING VISIT FOR PHOTOSENSORS PROGRAMMING
- SITE VISIT 4 - CUSTOMER TRAINING - PROVIDE OMM MANUALS FOR ALL SYSTEMS AND CLIENT TRAINING

CONTRACTOR TO VERIFY LOCATIONS OF ALL DEVICES INCLUDING PHOTOCELLS, OCCUPANCY SENSORS DURING PREWIRE SITE VISIT BY FIELD SERVICE TECHNICIAN

WIRING NOTES:

□ INPUT POWER FROM ELECTRIC CIRCUIT

● (2) #12AWG + GND

▲ Control link requires Lutron All-in one cable GRX-CBL-346S-500 (5 Conductor) or 2 #18AWG (class 2 power) plus one Belden #9461 or Alpha #2211 cable.

(A)

CLIENT

TOWN OF SURFSIDE COMMUNITY CENTER
9301 Collins Avenue, Surfside, Florida 33154

DESIGNER

SPILLIS CANDELA DMJM
800 DOUGLAS ENTRANCE, SUITE 200
CORAL GABLES, FL 33134
T: 305-444-4691 F: 305-447--3580
www.spilliscandeladmjm.com
FLORIDA LICENSE AA0003298

CONSULTANTS

LANDSCAPE ARCHITECTURE
SAVINO & MILLER DESIGN STUDIO
12345 NE 6TH AVENUE, MIAMI, FLORIDA 33161
Tel.: (305) 892-9082 Fax: (305) 895-9083

ESTIMATING CONSULTANT
CMS CONSTRUCTION MANAGEMENT SERVICES
10 FARMAY DRIVE SUITE 301 DEERFIELD BEACH, FL 33441
Tel.: (954) 481-1611 Fax: (954) 427-3142

COASTAL CONTRUCTION
EDC CORPORATION
2455 SW 27TH AVENUE , MIAMI, FLORIDA 33145
Tel.: (305) 858-8100 Fax: (305) 858-4760

FOOD SERVICES CONSULTANT
SYSTEMS DESIGN INTERNATIONAL
110 EAST BROWARD BOULEVARD FT. LAUDERDALE, FL 33301
Tel.: (954) 315-3855 Fax: (954) 208-9018

POOL CONSULTANT
AQUADYNAMICS, INC.
5000 SW 75TH AVE. SUITE 203, MIAMI, FLORIDA 33155
Tel.: (305) 667-8975 Fax: (305) 662-1002

LEED CONSULTANT
SPINNAKER GROUP, INC.
501 SPINNAKER, WESTON, FL 33326
Tel.: (954) 347-0967 Fax: (954) 217-3614

REGISTRATION

PROFESSIONAL OF RECORD: E. RIVERO, P.E.
DISCIPLINE: ELECTRICAL ENGINEERING
REGISTRATION NO.: 42709

ISSUE

MARK	DATE	DESCRIPTION

PROJECT NO:	60028604
DRAWN BY:	
CHECKED BY:	
DATE:	10-22-2009

KEY PLAN

SHEET TITLE

LIGHTING CONTROL DIAGRAMS

E4.1.02

© 2003 DMJMH+N, Inc. Rev. 2003-1