40 YEAR BUILDING REPAIR AND RESTORATION

PHASE IIB: ROOF & FACADE MAINTENANCE ANCHOR SYSTEM

CHAMPLAIN TOWERS SOUTH CONDOMINIUM

8777 COLLINS AVENUE
SURFSIDE, FLORIDA 33154

BID SET

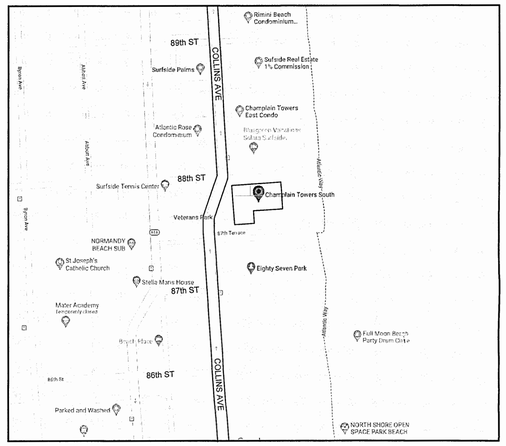

LOCATION MAP

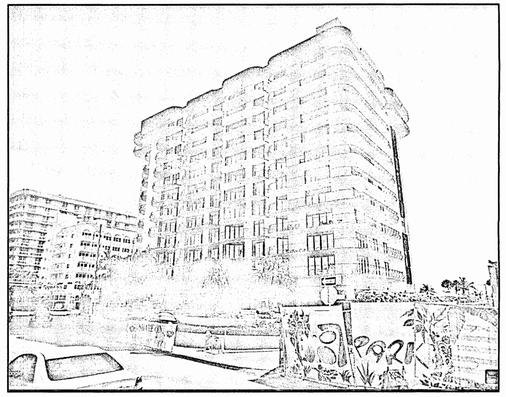

STREET VIEW

DRAWING LIST - PHASE IIB

S2B-1.1 9TH FLOOR FRAMING PLAN
S2B-1.4 PENTHOUSE ROOF FRAMING PLAN
S2B-2.1 ROOF ANCHORS & REPAIR DETAILS

This item has been electronically signed and sealed by Frank Morabito, PE SI on the date adjacent to the seal using a SHA authentication code. Printed copies of this document are not considered signed and sealed and the SHA authentication code must be verified on any electronic copies.
2021.06.08 13:12:06-04'00'

DESIGN TEAM

STRUCTURAL ENGINEER:
MORABITO CONSULTANTS, INC.
PHONE: (410) 467-2377
EMAIL: JBAIN@MORABITOCONSULTANTS.COM

ROOF CONSULTANT:
JACK BROWN & ASSOCIATES
PHONE: (561) 434-3155
EMAIL: JBA@GATE.NET

MEP CONSULTANT:
H. VIDAL & ASSOCIATES, INC.
PHONE: (305) 571-1860
EMAIL: KAREN@VIDALENGINEERING.COM

OFFICE COPY

TOWN OF SURFSIDE
APPROVED _____ Permit No. 21-462
Address 8777 Collins Ave
Planning & Zoning Board N/A Date 6/11/21
Building Official _____ Date 6/9/21
Chief Electrical Inspector _____ Date _____
Chief Plumbing Inspector _____ Date _____
Chief Mechanical Inspector _____ Date _____
Structural Engineer N/A Date 6/11/21
Public Works Director _____ Date _____

CHAMPLAIN TOWERS SOUTH CONDOMINIUM
8777 COLLINS AVENUE
SURFSIDE, FLORIDA 33154

CHAMPLAIN TOWERS SOUTH 40-YEAR BUILDING REPAIR & RESTORATION
PHASE IIB: BUILDING MAINTENANCE ROOF ANCHOR SYSTEM

morabito consultants
Structural Engineers | Remediation & Parking Consultants
206 Via Condado Way | Palm Beach Gardens, FL 33418-1701
561.316.7660 | www.morabitoconsultants.com
© Copyright Morabito Consultants, Inc.

No.	Date	Revisions

DESIGNED -	DRAWN EWC
CHECKED -	APPROVED FPM

Project No.: 18217
Date: 01/07/2021
Scale: As indicated
Sheet Title: COVER SHEET
Sheet No.: C2B-1.0

40 YEAR BUILDING REPAIR AND RESTORATION

PHASE IIB: ROOF & FACADE MAINTENANCE ANCHOR SYSTEM

CHAMPLAIN TOWERS SOUTH CONDOMINIUM

8777 COLLINS AVENUE
SURFSIDE, FLORIDA 33154

BID SET

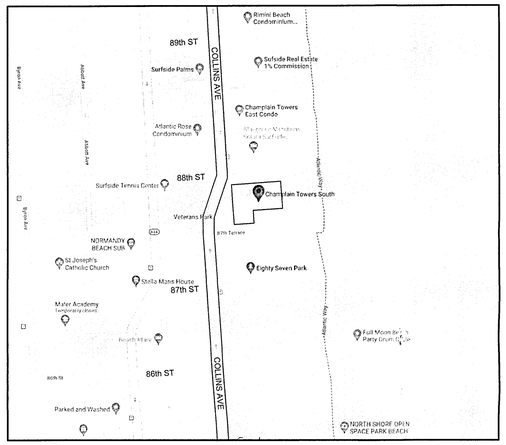

LOCATION MAP

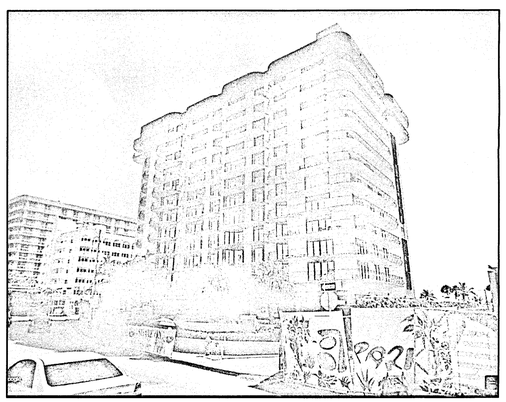

STREET VIEW

DRAWING LIST - PHASE IIB

C2B-1.0	COVER SHEET
S2B-1.1	9TH FLOOR FRAMING PLAN
S2B-1.2	12TH FLOOR FRAMING PLAN
S2B-1.3	MAIN ROOF FRAMING PLAN
S2B-1.4	PENTHOUSE ROOF FRAMING PLAN
S2B-2.1	ROOF ANCHORS & REPAIR DETAILS
S2B-2.2	DURAPAX ROOFING SYSTEM DETAILS
S2B-2.3	DURAPAX SPECIFICATIONS
S2B-2.4	DURAPAX SPECIFICATIONS
E-0	ELECTRICAL SYMBOL LEGEND AND NOTES
E-1	LOW ROOF & PENTHOUSE FLOOR PLAN
E-2	PENTHOUSE AND HIGH ROOF PLAN
E-3	DETAILS
P-0	PLUMBING SYMBOL LEGEND AND NOTES
P-1	LOW ROOF & PENTHOUSE FLOOR PLAN
P-2	PENTHOUSE AND HIGH ROOF PLAN
P-3	DETAILS

SPECIFICATIONS

SECTION 00 2113	INSTRUCTION TO BIDDERS
SECTION 00 4100	BID FORM
SECTION 00 5213	CONTRACT AGREEMENT FORM
SECTION 00 7212	ADDITIONS TO THE CONTRACT AGREEMENT
SECTION 00 7300	SUPPLEMENTAL CONTRACT CONDITIONS
SECTION 01 1100	SUMMARY OF WORK
SECTION 01 2200	UNIT PRICES
SECTION 01 3100	PROJECT MANAGEMENT AND COORDINATION
SECTION 01 3300	SUBMITTAL PROCEDURES
SECTION 01 4000	QUALITY REQUIREMENTS
SECTION 01 5000	TEMPORARY FACILITIES & CONTROL
SECTION 01 6000	PRODUCT REQUIREMENTS
SECTION 01 7300	EXECUTION
SECTION 01 7400	CLEANING & WASTE MANAGEMENT
SECTION 02 4119	SELECTIVE DEMOLITION
SECTION 03 0100	MAINTENANCE OF CONCRETE
SECTION 04 1100	PREPARATION OF LIME OR PORTLAND BASED STUCCO
SECTION 04 1101	REPAIR OF STUCCO
SECTION 05 0519	POST-INSTALLED ANCHORS IN CONCRETE & MASONRY
SECTION 05 5000	METAL FABRICATIONS
SECTION 07 0000	ROOF SURVEY REPORT
SECTION 07 0001	DURAPAX 2020 NOA FOR CONCRETE
SECTION 07 0002	DURAPAX RESTORATION WARRANTY SPECIMEN
SECTION 07 0151	MEMBRANE ROOFING RE-COATING
SECTION 07 0152	MEMBRANE ROOFING REPLACEMENT
SECTION 07 9200	SEALANT
SECTION 09 2400	PORTLAND CEMENT PLASTERING STUCCO

DESIGN TEAM

STRUCTURAL ENGINEER:
MORABITO CONSULTANTS, INC.
PHONE: (410) 467-2377
EMAIL: JBAIN@MORABITOCONSULTANTS.COM

ROOF CONSULTANT:
JACK BROWN & ASSOCIATES
PHONE: (561) 434-3155
EMAIL: JBA@GATE.NET

MEP CONSULTANT:
H. VIDAL & ASSOCIATES, INC.
PHONE: (305) 571-1860
EMAIL: KAREN@VIDALENGINEERING.COM

OFFICE COPY

TOWN OF SURFSIDE
APPROVED _____ Permit No. 21-462
Address 8777 Collins Avenue
Planning & Zoning Board _____ Date _____
Building Official _____ Date _____
Chief Electrical Inspector _____ Date _____
Chief Plumbing Inspector _____ Date _____
Chief Mechanical Inspector _____ Date _____
Structural Engineer _____ Date _____
Public Works Director _____ Date _____

RECEIVED
MAY 17 2021
By _____

CHAMPLAIN TOWERS SOUTH CONDOMINIUM
8777 COLLINS AVENUE
SURFSIDE, FLORIDA 33154

CHAMPLAIN TOWERS SOUTH 40-YEAR BUILDING REPAIR & RESTORATION

PHASE IIB: BUILDING MAINTENANCE ROOF ANCHOR SYSTEM

SEAL
License: 0000000
Expires: 00/00/00

morabito consultants

Structural Engineers | Remediation & Parking Consultants
206 Via Condado Way | Palm Beach Gardens, FL 33418-1701
561.316.7660 | www.morabitoconsultants.com

© Copyright Morabito Consultants, Inc.

No.	Date	Revisions

DESIGNED -	DRAWN EWC
CHECKED -	APPROVED FPM

Project No.: 18217

Date: 01/07/2021

Scale: As indicated

Sheet Title: COVER SHEET

Sheet No.: C2B-1.0

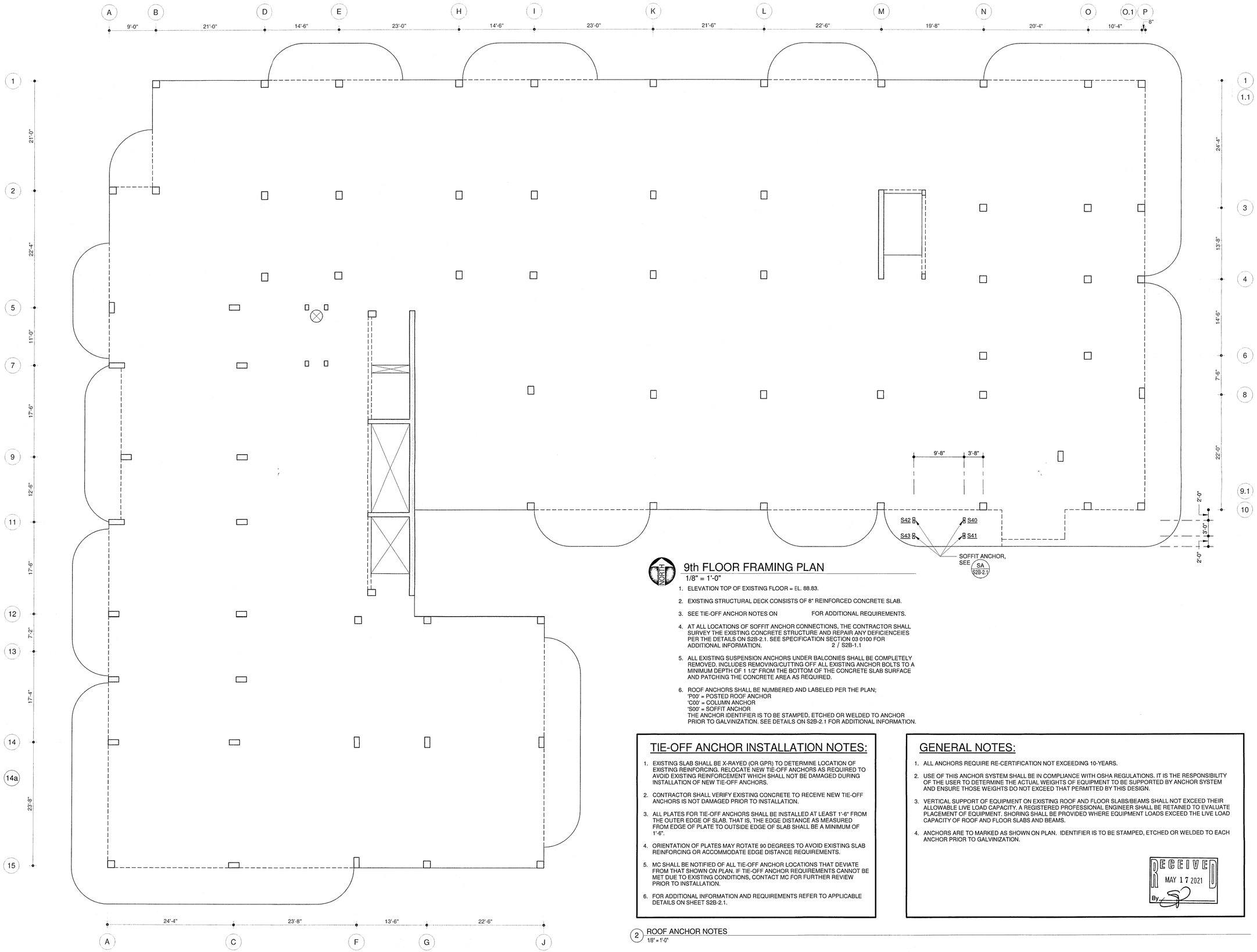

9th FLOOR FRAMING PLAN

1/8" = 1'-0"

1. ELEVATION TOP OF EXISTING FLOOR = EL. 88.83.
2. EXISTING STRUCTURAL DECK CONSISTS OF 8" REINFORCED CONCRETE SLAB.
3. SEE TIE-OFF ANCHOR NOTES ON FOR ADDITIONAL REQUIREMENTS.
4. AT ALL LOCATIONS OF SOFFIT ANCHOR CONNECTIONS, THE CONTRACTOR SHALL SURVEY THE EXISTING CONCRETE STRUCTURE AND REPAIR ANY DEFICIENCEIES PER THE DETAILS ON S2B-2.1. SEE SPECIFICATION SECTION 03 0100 FOR ADDITIONAL INFORMATION. 2 / S2B-1.1
5. ALL EXISTING SUSPENSION ANCHORS UNDER BALCONIES SHALL BE COMPLETELY REMOVED. INCLUDES REMOVING/CUTTING OFF ALL EXISTING ANCHOR BOLTS TO A MINIMUM DEPTH OF 1 1/2" FROM THE BOTTOM OF THE CONCRETE SLAB SURFACE AND PATCHING THE CONCRETE AREA AS REQUIRED.
6. ROOF ANCHORS SHALL BE NUMBERED AND LABELED PER THE PLAN;
   'P00' = POSTED ROOF ANCHOR
   'C00' = COLUMN ANCHOR
   'S00' = SOFFIT ANCHOR
   THE ANCHOR IDENTIFIER IS TO BE STAMPED, ETCHED OR WELDED TO ANCHOR PRIOR TO GALVINIZATION. SEE DETAILS ON S2B-2.1 FOR ADDITIONAL INFORMATION.

TIE-OFF ANCHOR INSTALLATION NOTES:

1. EXISTING SLAB SHALL BE X-RAYED (OR GPR) TO DETERMINE LOCATION OF EXISTING REINFORCING. RELOCATE NEW TIE-OFF ANCHORS AS REQUIRED TO AVOID EXISTING REINFORCEMENT WHICH SHALL NOT BE DAMAGED DURING INSTALLATION OF NEW TIE-OFF ANCHORS.
2. CONTRACTOR SHALL VERIFY EXISTING CONCRETE TO RECEIVE NEW TIE-OFF ANCHORS IS NOT DAMAGED PRIOR TO INSTALLATION.
3. ALL PLATES FOR TIE-OFF ANCHORS SHALL BE INSTALLED AT LEAST 1'-6" FROM THE OUTER EDGE OF SLAB. THAT IS, THE EDGE DISTANCE AS MEASURED FROM EDGE OF PLATE TO OUTSIDE EDGE OF SLAB SHALL BE A MINIMUM OF 1'-6".
4. ORIENTATION OF PLATES MAY ROTATE 90 DEGREES TO AVOID EXISTING SLAB REINFORCING OR ACCOMMODATE EDGE DISTANCE REQUIREMENTS.
5. MC SHALL BE NOTIFIED OF ALL TIE-OFF ANCHOR LOCATIONS THAT DEVIATE FROM THAT SHOWN ON PLAN. IF TIE-OFF ANCHOR REQUIREMENTS CANNOT BE MET DUE TO EXISTING CONDITIONS, CONTACT MC FOR FURTHER REVIEW PRIOR TO INSTALLATION.
6. FOR ADDITIONAL INFORMATION AND REQUIREMENTS REFER TO APPLICABLE DETAILS ON SHEET S2B-2.1.

GENERAL NOTES:

1. ALL ANCHORS REQUIRE RE-CERTIFICATION NOT EXCEEDING 10-YEARS.
2. USE OF THIS ANCHOR SYSTEM SHALL BE IN COMPLIANCE WITH OSHA REGULATIONS. IT IS THE RESPONSIBILITY OF THE USER TO DETERMINE THE ACTUAL WEIGHTS OF EQUIPMENT TO BE SUPPORTED BY ANCHOR SYSTEM AND ENSURE THOSE WEIGHTS DO NOT EXCEED THAT PERMITTED BY THIS DESIGN.
3. VERTICAL SUPPORT OF EQUIPMENT ON EXISTING ROOF AND FLOOR SLABS/BEAMS SHALL NOT EXCEED THEIR ALLOWABLE LIVE LOAD CAPACITY. A REGISTERED PROFESSIONAL ENGINEER SHALL BE RETAINED TO EVALUATE PLACEMENT OF EQUIPMENT. SHORING SHALL BE PROVIDED WHERE EQUIPMENT LOADS EXCEED THE LIVE LOAD CAPACITY OF ROOF AND FLOOR SLABS AND BEAMS.
4. ANCHORS ARE TO MARKED AS SHOWN ON PLAN. IDENTIFIER IS TO BE STAMPED, ETCHED OR WELDED TO EACH ANCHOR PRIOR TO GALVINIZATION.

RECEIVED
MAY 17 2021
By

2 ROOF ANCHOR NOTES
1/8" = 1'-0"

CHAMPLAIN TOWERS SOUTH CONDOMINIUM

8777 COLLINS AVENUE
SURFSIDE, FLORIDA 33154

CHAMPLAIN TOWERS SOUTH 40-YEAR BUILDING REPAIR & RESTORATION

PHASE IIB: BUILDING MAINTENANCE ROOF ANCHOR SYSTEM

SEAL
License: 0000000
Expires: 00/00/00

This item has been digitally signed and sealed by Robert J Miller on the date adjacent to the seal. Printed copies of this document are not considered signed and sealed and the signature must be verified on any electronic copies.

morabito consultants

Structural Engineers | Remediation & Parking Consultants
206 Via Condado Way | Palm Beach Gardens, FL 33418-1701
561.316.7660 | www.morabitoconsultants.com
© Copyright Morabito Consultants, Inc.

No.	Date	Revisions
	2/3/21	ADDENDUM #3

DESIGNED DRE	DRAWN DRE
CHECKED -	APPROVED FPM

Project No.: 18217

Date: 01/07/2021

Scale: 1/8" = 1'-0"

Sheet Title: 9TH FLOOR FRAMING PLAN

Sheet No.: S2B-1.1

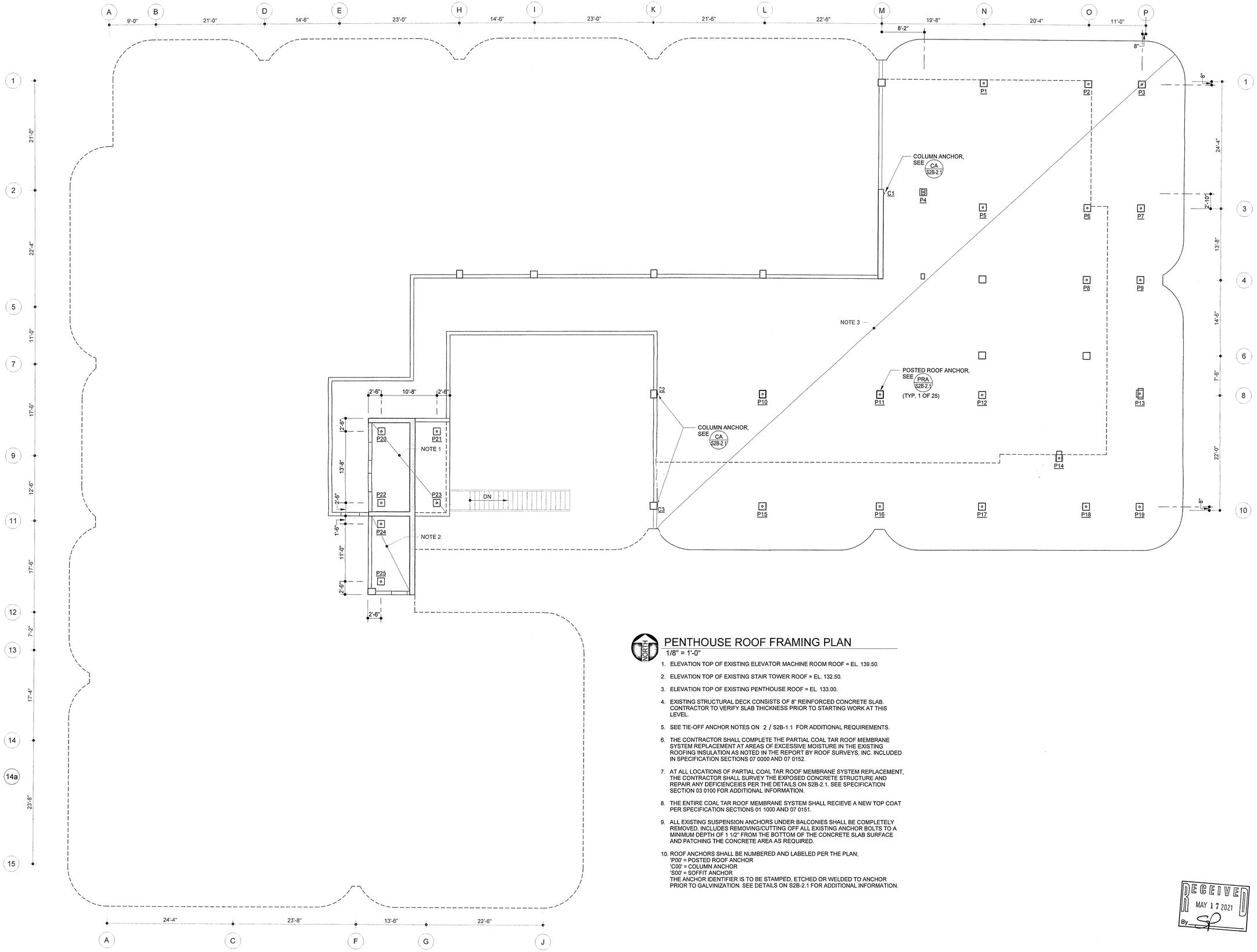

PENTHOUSE ROOF FRAMING PLAN

1/8" = 1'-0"

1. ELEVATION TOP OF EXISTING ELEVATOR MACHINE ROOM ROOF = EL. 139.50.
2. ELEVATION TOP OF EXISTING STAIR TOWER ROOF = EL. 132.50.
3. ELEVATION TOP OF EXISTING PENTHOUSE ROOF = EL. 133.00.
4. EXISTING STRUCTURAL DECK CONSISTS OF 8" REINFORCED CONCRETE SLAB. CONTRACTOR TO VERIFY SLAB THICKNESS PRIOR TO STARTING WORK AT THIS LEVEL.
5. SEE TIE-OFF ANCHOR NOTES ON 2 / S2B-1.1 FOR ADDITIONAL REQUIREMENTS.
6. THE CONTRACTOR SHALL COMPLETE THE PARTIAL COAL TAR ROOF MEMBRANE SYSTEM REPLACEMENT AT AREAS OF EXCESSIVE MOISTURE IN THE EXISTING ROOFING INSULATION AS NOTED IN THE REPORT BY ROOF SURVEYS, INC. INCLUDED IN SPECIFICATION SECTIONS 07 0000 AND 07 0152.
7. AT ALL LOCATIONS OF PARTIAL COAL TAR ROOF MEMBRANE SYSTEM REPLACEMENT, THE CONTRACTOR SHALL SURVEY THE EXPOSED CONCRETE STRUCTURE AND REPAIR ANY DEFICIENCEIES PER THE DETAILS ON S2B-2.1. SEE SPECIFICATION SECTION 03 0100 FOR ADDITIONAL INFORMATION.
8. THE ENTIRE COAL TAR ROOF MEMBRANE SYSTEM SHALL RECIEVE A NEW TOP COAT PER SPECIFICATION SECTIONS 01 1000 AND 07 0151.
9. ALL EXISTING SUSPENSION ANCHORS UNDER BALCONIES SHALL BE COMPLETELY REMOVED. INCLUDES REMOVING/CUTTING OFF ALL EXISTING ANCHOR BOLTS TO A MINIMUM DEPTH OF 1 1/2" FROM THE BOTTOM OF THE CONCRETE SLAB SURFACE AND PATCHING THE CONCRETE AREA AS REQUIRED.
10. ROOF ANCHORS SHALL BE NUMBERED AND LABELED PER THE PLAN;
    'P00' = POSTED ROOF ANCHOR
    'C00' = COLUMN ANCHOR
    'S00' = SOFFIT ANCHOR
    THE ANCHOR IDENTIFIER IS TO BE STAMPED, ETCHED OR WELDED TO ANCHOR PRIOR TO GALVINIZATION. SEE DETAILS ON S2B-2.1 FOR ADDITIONAL INFORMATION.

RECEIVED
MAY 17 2021
By

CHAMPLAIN TOWERS SOUTH CONDOMINIUM

8777 COLLINS AVENUE
SURFSIDE, FLORIDA 33154

CHAMPLAIN TOWERS SOUTH 40-YEAR BUILDING REPAIR & RESTORATION

PHASE IIB: BUILDING MAINTENANCE ROOF ANCHOR SYSTEM

SEAL

License: 0000000
Expires: 00/00/00

morabito consultants

Structural Engineers | Remediation & Parking Consultants
206 Via Condado Way | Palm Beach Gardens, FL 33418-1701
561.316.7660 | www.morabitoconsultants.com
© Copyright Morabito Consultants, Inc.

No.	Date	Revisions

DESIGNED DRE	DRAWN DRE
CHECKED -	APPROVED FPM

Project No.: 18217

Date: 01/07/2021

Scale: 1/8" = 1'-0"

Sheet Title: PENTHOUSE ROOF FRAMING PLAN

Sheet No.: S2B-1.4

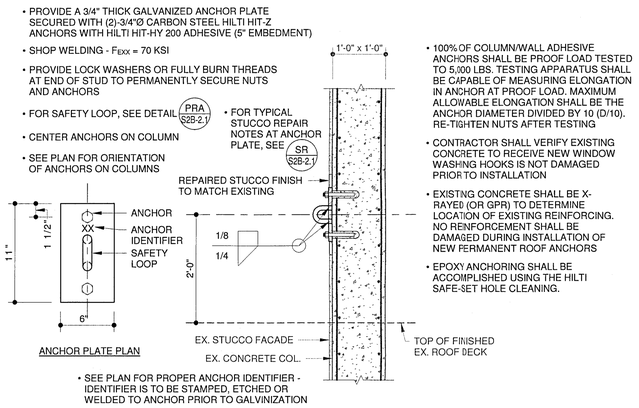

CA NEW ANCHOR AT EX. COLUMN
3/4" = 1'-0"

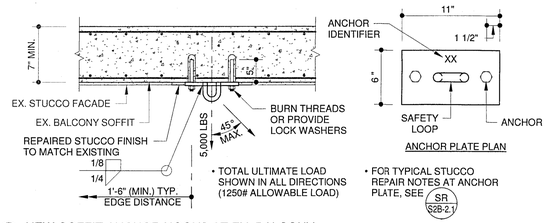

SA NEW SOFFIT ANCHOR HOOKS AT EX. BALCONY
3/4" = 1'-0"

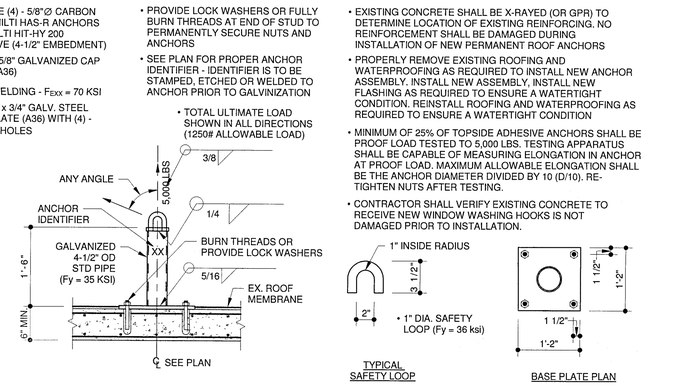

PRA POSTED ROOF ANCHOR
3/4" = 1'-0"

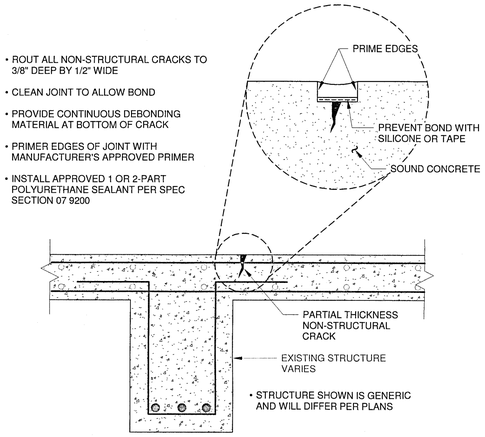

JS NON-STRUCTURAL CRACK REPAIR (CRACK SEALANT) - PHASE IIB
1 1/2" = 1'-0"

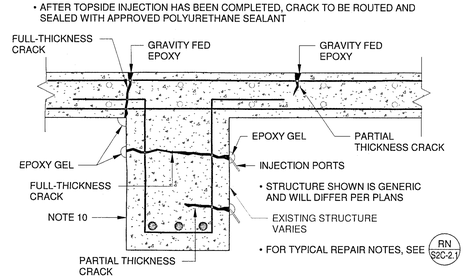

EI STRUCTURAL CRACK REPAIR (EPOXY INJECTION) - PHASE IIB
1 1/2" = 1'-0"

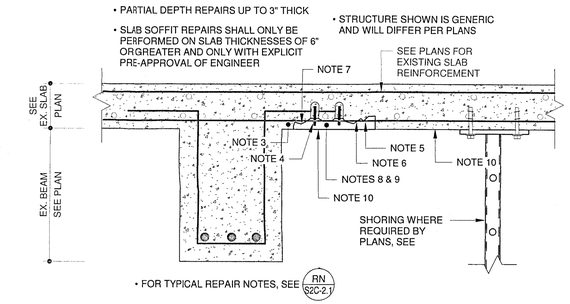

SU SLAB SOFFIT REPAIR - PHASE IIB
1 1/2" = 1'-0"

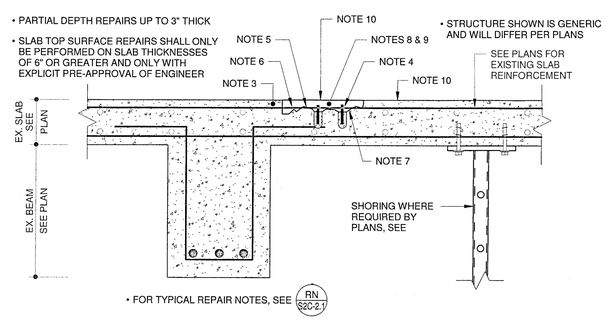

ST SLAB TOP SURFACE REPAIR - PHASE IIB
1 1/2" = 1'-0"

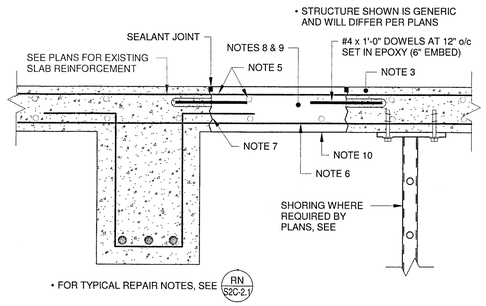

SF SLAB FULL-DEPTH REPAIR - PHASE IIB
1 1/2" = 1'-0"

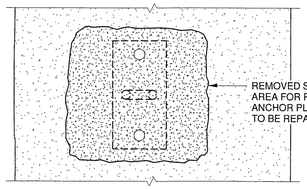

SURFACE ELEVATION

1. PRIOR TO COMMENCEMENT OF STUCCO REPAIRS, THE CONTRACTOR SHALL HIRE AN EXPERIENCED TESTING LABORATORY TO COMPLETE A CHEMICAL AND MICROSCOPIC ANALYSIS OF THE EXISTING STUCCO.
2. CHIP-OFF ALL REQUIRED STUCCO WITH CHISEL AND HAMMER DOWN TO THE CONCRETE SURFACE TO ALLOW PROPER INSTALLATION OF ROOF ANCHORS. ANCHOR PLATES SHALL BE INSTALLED DIRECTLY TO THE CONCRETE SURFACE.
3. AFTER ROOF ANCHOR INSTALLATION, SEAL THE PERIMETER OF THE ANCHOR PLATE WITH AN APPROVED URETHANE SEALANT. THE CONTRACTOR SHALL THEN PROPERLY CLEAN THE REMAINING EXPOSED EXISTING CONCRETE SURFACE TO RECEIVE STUCCO REPAIR.
4. WHERE EXISTING BROWN COAT REMAINS, MECHANICALLY ROUGHEN THE EXISTING SURFACE WITH SAND BLASTING OR LIGHT CHIPPING HAMMER OR HAMMER AND CHISEL TO REMOVE LOOSE MATERIAL TO ASSURE PROPER BONDING. SURFACE MUST BE STRUCTURALLY SOUND AND CLEAN, FREE OF ANY AND ALL OIL, GREASE, WAX, DUST, SAND, DIRT, LAITANCE, PAINT. EFFLORESCENCE, CURING COMPOUNDS, FORM RELEASE AGENTS AND BASE MATERIALS OF ANY KIND.
5. COAT PREPARED SURFACE WITH AN APPROVED BONDING AGENT CONFORMING TO ASTM C-932.
6. STUCCO REPAIR MATERIALS SHALL MATCH THE EXISTING STUCCO AS DETERMINED BY THE LABORATORY ANALYSIS. SUBMIT PRODUCT DATA FOR APPROVAL.
7. TOUCH-UP EXISTING BROWN COAT, OR INSTALL NEW BROWN COAT, AND INSTALL NEW FINISH COAT OF STUCCO TO MATCH EXISTING IN COLOR, THICKNESS AND APPEARANCE. SEE SPECIFICATIONS FOR ADDITIONAL PROJECT REQUIREMENTS.

SR STUCCO REPAIR OVER MASONRY / CONCRETE SURFACES - PHASE IIB
3/4" = 1'-0"

RN TYPICAL CONCRETE REPAIR PROCEDURES AND NOTES

1. AREAS OF UNSOUND CONCRETE AND DETERIORATED REINFORCING SHALL BE IDENTIFIED AND MARKED BY CONTRACTOR. THE CONTRACTOR SHALL PROVIDE A UNIT PRICE FOR ALL WORK SHOWN ON THESE DRAWINGS AND DETAILS AS REQUIRED BY SPEC SECTIONS 002113, 004100, 012200 AND 012300. WHERE POSSIBLE, REMOVAL AREAS SHALL BE RECTANGULAR IN SHAPE IN PLAN/ELEVATION VIEW. SEE SPECIFICATION SECTIONS 024119 AND 030100. IT IS IN THE INTEREST OF THE OWNER TO REPAIR ALL CONCRETE FACADE DEFECTS WITHIN THE WORK LIMITS SHOWN REGARDLESS OF WHETHER OR NOT ALL DEFECTS ARE INDICATED ON THE CONTRACT DOCUMENTS AND/OR IDENTIFIED BY THE CONTRACTOR.
2. TEMPORARILY SHORE ALL EXISTING CONCRETE SLABS, BEAMS, WALLS AND COLUMNS WHICH ARE DAMAGED PRIOR TO PERFORMING THE NECESSARY REPAIRS. SEE SPECIFICATION SECTIONS 31 40 00 AND 03 01 00. AS DEMOLITION PROGRESSES, THE CONTRACTOR SHALL NOTIFY THE SHORING ENGINEER WHEN DEMOLITION LIMITS ARE EXPECTED TO EXTEND BEYOND CURRENT SHORING LIMITS. WORK SHALL CEASE UNTIL SHORING HAS BEEN RE-EVALUATED. SHORING SHALL BE DESIGNED BY A REGISTERED PROFESSIONAL ENGINEER RETAINED BY THE CONTRACTOR UNO. SHORING SHALL BE DESIGNED FOR ALL SUPERIMPOSED LOADS DURING CONSTRUCTION IN ADDITION TO SELF-WEIGHT OF STRUCTURE. SHORING ENGINEER SHALL BE RESPONSIBLE FOR ALL REQUIRED SEQUENCING AND RE-SHORING AS REQUIRED. SHORING PLANS AND CALCULATIONS SHALL BE SUBMITTED TO THE ENGINEER OF RECORD FOR REVIEW.
3. REMOVE ALL UNSOUND CONCRETE WITH CHIPPING HAMMERS. USE 30 POUND CHIPPING HAMMERS FOR ALL SELECTIVE DEMOLITION UNLESS OTHERWISE APPROVED. DO NOT HAMMER AROUND REBAR WITH LARGER THAN 15 POUND HAMMERS.
4. WHERE EXPOSED PORTIONS OF THE EXISTING REINFORCING ARE NOT SOUNDLY BONDED TO THE REMAINING CONCRETE, OR IF MORE THAN 1/2 OF THE REBAR DIAMETER / THICKNESS IS EXPOSED, THE CONTRACTOR SHALL REMOVE CONCRETE AROUND AND UNDER THE REINFORCING. ALL FREELY EXPOSED REINFORCING SHALL BE NO CLOSER THAN 3/4" TO EXISTING CONCRETE. WHEN EXISTING REINFORCING IS NOT PROPERLY EXPOSED (OR NO REBAR IS PRESENT) THE CONTRACTOR SHALL INSTALL STAINLESS STEEL THREADED RODS SET IN EPOXY AT 6" ON CENTER EACH WAY (3" MINIMUM EMBEDMENT INTO SOUND CONCRETE) UNLESS OTHERWISE SHOWN IN DETAILS OR DIRECTED IN FIELD. REMOVE ALL OILS FROM RODS PRIOR TO SETTING IN EPOXY.
5. REMOVE ALL DIRT, GREASE, OIL, LAITANCE AND CURING COMPOUNDS FROM EXISTING CONCRETE SURFACES AND SUBSTRATES BY SANDBLASTING OR MECHANICAL ROUGHENING. PROVIDE MANUFACTURER-REQUIRED CRSI CONCRETE SURFACE PROFILE (CSP) FOR EACH REPAIR PRODUCT TO BE USED. FOR CONVENTIONAL PORTLAND CONCRETE REPAIR, NO LESS THAN CSP-6 (1/4" AMPLITUDE) SHALL BE USED. REMOVE GREASE, OIL, RUST AND MILL SCALING FROM EXISTING EMBEDDED STEEL, ANCHOR PLATES AND REINFORCING STEEL BY SANDBLASTING OR WIRE BRUSHING. COAT ALL EXPOSED REINFORCING STEEL WITH 7 WET MILS OF ECB ANTI-CORROSION PROTECTION, BY CONPROCO.
6. ADD NEW REBAR AND/OR EPOXY COATED WIRE MESH TO REPLACE ANY RUSTED OR DEFECTIVE EXISTING REINFORCING AS DIRECTED BY MORABITO CONSULTANTS INC. SEE EXISTING FRAMING PLANS AND DETAILS FOR ESTIMATED EXISTING REINFORCEMENT. ALL WIRE MESH SHALL BE EPOXY-COATED. PROVIDE PROPER REINFORCING LAP SPLICES AS REQUIRED. SEE SPECIFICATIONS FOR FURTHER INFORMATION.
7. PRESOAK ALL EXISTING HORIZONTAL AND VERTICAL CONCRETE SURFACES TO RECEIVE REPAIR CONCRETE TO ACHIEVE A SATURATED SURFACE DRY (SSD) CONDITION BEFORE APPLYING CEMENTITIOUS REPAIR CONCRETE/MORTAR. INSTALL PROPRIETARY CONCRETE REPAIR MATERIAL PER MANUFACTURER'S REQUIREMENTS AND RECOMMENDATIONS. APPLY "SCRUB", "SLURRY", OR "PEANUT BUTTER" COAT ON SSD CONCRETE IF RECOMMENDED BY MANUFACTURER'S WRITTEN DATA SHEET. DO NOT WET CONCRETE PRIOR TO INSTALLATION OF EPOXY-SAND (NON-CEMENTITIOUS) MATERIALS. ALLOW EPOXY ANCHORING GROUTS TO FULLY CURE PRIOR TO WETTING SURFACES. PROPRIETARY CONCRETE BONDING AGENTS MAY ONLY BE USED AS APPROVED BY THE ENGINEER.
8. WHEN CONCRETE PATCH DEPTH IS LESS THAN 2 1/2", INSTALL APPROVED SURFACE REPAIR MORTAR. EXTEND MORTAR WITH AGGREGATE WHERE REQUIRED BY SPECIFICATIONS. ALLOW REPAIR MORTAR TO BE CURED PER SPEC SECTION 030100.
9. WHEN CONCRETE PATCH DEPTH IS GREATER THAN OR EQUAL TO 2 1/2", INSTALL APPROVED PRE-MIX CONCRETE (BAG MIX) OR READY MIX CONCRETE. BAG MIX REPAIR CONCRETE/MORTAR SHALL BE SHRINKAGE-COMPENSATING WITH FIBERS. READY MIX CONCRETE SHALL BE DESIGNED TO THE LIMITATIONS IN SECTION 030100. REPAIR CONCRETE SHALL BE CURED PER SPEC SECTION 030100.
10. AFTER ALL CONCRETE REPAIR PATCHES HAVE FULLY CURED, AND IF REQUIRED BY THE BID FORM, ALL SURFACES SHALL BE COATED WITH A ACRYLIC CONCRETE COATING WITH COLOR TO MATCH EXISTING. PRESSURE WASH AND PREPARE EXISTING SURFACES TO RECEIVE COATING PER MANUFACTURER'S REQUIREMENTS AND RECOMMENDATIONS.
11. ALL EXISTING CONNECTIONS, ANCHORS, AND PLATES THAT ARE EXPOSED DURING REPAIRS SHALL BE PROPERLY SAND BLASTED OR MECHANICALLY CLEANED AND COATED WITH ECB ANTI-CORROSION PROTECTION (ORANGE COLORED) BY CONPROCO CORP. PER SPEC SECTION 030100.
12. SEE SPECIFICATIONS FOR ADDITIONAL INFORMATION.

RECEIVED
MAY 17 2021
By

CHAMPLAIN TOWERS SOUTH CONDOMINIUM
8777 COLLINS AVENUE
SURFSIDE, FLORIDA 33154

CHAMPLAIN TOWERS SOUTH 40-YEAR BUILDING REPAIR & RESTORATION
PHASE IIB: BUILDING MAINTENANCE ROOF ANCHOR SYSTEM

SEAL
License: 0000000
Expires: 00/00/00

morabito consultants
Structural Engineers | Remediation & Parking Consultants
206 Via Condado Way | Palm Beach Gardens, FL 33418-1701
561.316.7660 | www.morabitoconsultants.com
© Copyright Morabito Consultants, Inc.

No.	Date	Revisions
	2/3/21	ADDENDUM #3

DESIGNED DRE	DRAWN DRE
CHECKED -	APPROVED FPM

Project No.: 18217
Date: 01/07/2021
Scale: As indicated
Sheet Title: ROOF ANCHORS & REPAIR DETAILS
Sheet No.: S2B-2.1